TOILET SEATS

BEMIS INNOVATION FOR EVERYDAY LIFE™

MADE IN THE USA

Headquartered in Sheboygan Falls, WI and family-owned since 1901, we continue to grow with respect, teamwork, and leadership that builds strong roots for continuous quality, improvement, and innovation.

BEMIS INNOVATION FOR EVERYDAY LIFE™

BemisSustainability.com

EARTH-FRIENDLY MATERIALS & PROCESSES

Bemis Manufacturing Company works to provide products that are produced and shipped with the lowest environmental impact in mind. We pride ourselves on reducing, reusing, and recycling whenever possible.

0B7012501

BEMIS®

SHOWROOM PROGRAM

TOILET SEAT
FEATURE GUIDE

STA-TITE® SEAT FASTENING SYSTEM™

Never Loosens™, installs with ease.

EASY•CLEAN & CHANGE®

Hinge allows for removal of seat for thorough cleaning and replacement.

EASY•CLEAN™

Hinge allows for removal of seat for thorough cleaning.

JUST•LIFT®

Provides easy access to hard-to-clean areas in, around and beneath the hinges.

WHISPER•CLOSE®

Hinge slowly and quietly closes with a tap eliminating slamming and pinched fingers.

PRECISION SEAT FIT™

Provides adjustability for the perfect bowl fit.

SUPER GRIP BUMPERS™

Prevents the seat from shifting on the toilet bowl and provides greater stability.

BUILT-IN POTTY SEAT™

2-in-1 toilet seat accommodates the needs of both adult and child.

ILUMALIGHT®

LED night light provides the perfect amount of illumination with a soft, soothing glow.

SHOWROOM
TRADE-UP STRATEGY

Give customers the features they want in the style of seat they prefer. Attractive price points for an easy sell while keeping margin dollars intact!

NO NEED TO SELL A "BUILDER GRADE" SEAT IN THE SHOWROOM

1600E4

1200E4

19170PLSL

19170CHSL / NISL

GOOD BETTER BEST

MODEL	MATERIAL	STA-TITE®	EASY•CLEAN™	WHISPER• CLOSE®	PRECISION SEAT FIT™	SUPER GRIP BUMPERS™
1600E4	Enameled Wood	●	●	●	●	
1200E4	Plastic	●	●	●	●	●
19170PLSL	High Density™ Enameled Wood	●	●	●	●	●
19170CHSL / NISL		●	●	●	●	●
BUILDER GRADE MODELS						
1500TTT	Enameled Wood	●			●	
1500EC			●			

SPECIALTY
PLASTIC

RENEW™ & RENEW PLUS™
BIDET CLEANSING SPA™

Renew
ROUND | B940
ELONGATED | B1940

Renew PLUS
ROUND | B980NL
ELONGATED | B1980NL

See price sheet for a complete list of available colors

- Adjustable Aerated Washes
- Continuous Heated Water
- Multi-Setting Warm Air Dryer *
- 3-in-1 Stainless Steel Nozzle
- Pulsate & Oscillate* Wash Functions
- Multi-Setting Heated Seat
- iLumaLight *
- Intuitive Touch Remote Control with Custom User Presets
- Automatic Deodorizer *
- Easy•Clean & Change
- Whisper•Close
- Precision Seat Fit
- Super Grip Bumpers

** Available on Renew PLUS only*

BEMIS

0B7012504

SPECIALTY
PLASTIC

RADIANCE™
HEATED NIGHT LIGHT SEAT

ROUND | H900NL
ELONGATED | H1900NL

- White (000)
- Biscuit | Linen (346)

- Multi-Setting Warming Seat
- iLumaLight
- STA-TITE Seat Fastening System
- Easy•Clean & Change
- Whisper•Close
- Precision Seat Fit
- Super Grip Bumpers

BEMIS

WHISPER•CLOSE
PLASTIC

AFFINITY™

ROUND | 200E4
ELONGATED | 1200E4

- White (000)
- Bone (006)
- Almond (146)
- Biscuit | Linen (346)
- Cotton White (390)

- STA-TITE Seat Fastening System
- Easy•Clean & Change
- Whisper•Close
- Precision Seat Fit
- Super Grip Bumpers

BEMIS

HIGH DENSITY™
ENAMELED WOOD

ALËSIO II™

ROUND | 9170
ELONGATED | 19170

See price sheet for a complete list of available colors and hinge options

- Chrome Hinges (CHSL)
- Brushed Nickel Hinges (NISL)
- Plastic Hinges (PLE4)

- STA-TITE Seat Fastening System
- Easy•Clean
- Whisper•Close
- Precision Seat Fit
- Super Grip Bumpers
- Highly-Stylized Design with Superior High-Gloss Finish Resists Chipping and Scratching

BEMIS

WHISPER•CLOSE
ENAMELED WOOD

ASHLAND™

ROUND | 600E4
ELONGATED | 1600E4

- White (000)
- Biscuit | Linen (346)
- Cotton White (390)

- STA-TITE Seat Fastening System
- Easy•Clean
- Whisper•Close
- Precision Seat Fit

BEMIS

0B7012519

WHISPER•CLOSE
ENAMELED WOOD

NEXTSTEP2™
BUILT-IN POTTY SEAT™

ROUND | 485E4
ELONGATED | 1485E4

- White (000)
- Biscuit | Linen (346)

- Plastic Child Seat Secures Magnetically in Cover
- Integrated Seat Eliminates Clutter
- Fits Both Adults and Children
- STA-TITE Seat Fastening System
- Easy•Clean
- Whisper•Close
- Precision Seat Fit

BEMIS

0B7012521

NATURAL REFLECTIONS™

Veneer

ROUND | 9601
ELONGATED | 19601

Solid Bamboo

ROUND | 9401
ELONGATED | 19401

- Natural Oak (378)
- Solid Bamboo (568)
- Walnut (888)

- Natural Oak and Walnut Finishes Bring Natural Beauty to Your Bath Without Splitting or Cracking
- Solid Bamboo Complements Bath Décor
- Classic Hinges Accent Bath Hardware

- Chrome Hinges (CP)
- Brushed Nickel Hinges (NI)

BEMIS

SPECIALTY
PLASTIC

CLASSIC COLORS®

ROUND | 200SLOWT
ELONGATED | 1200SLOWT

Visit Classic-Colors.com
for additional colors

- Available in 90+ Colors!
- STA-TITE Seat Fastening System
- Easy•Clean & Change
- Whisper•Close

BEMIS

SPECIALTY
PLASTIC

MEDIC-AID®

See price sheet for a complete list of options

- White (000)

- DuraGuard® Antimicrobial *
- STA-TITE Commercial Fastening System
- Super Grip Bumpers
- Heavy-Duty, Solid Plastic
- Options Include:
  - 2″ and 3″ Elevated Seats with Super Grip Bumpers
  - 4″ Lift Seats
  - Stainless Steel Safety Side Arms
  - 300 Series Stainless Steel Hardware

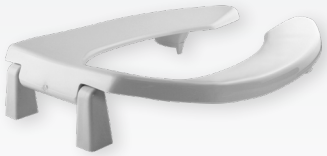

BEMIS

* *DuraGuard Antimicrobial does not protect users against bacteria, viruses, or other disease organisms. Always clean and wash this product thoroughly before and after each use.*

SPECIFICATIONS

BEMIS®

RESIDENTIAL WOOD

1500EC

RESIDENTIAL ENAMELED WOOD TOILET SEAT

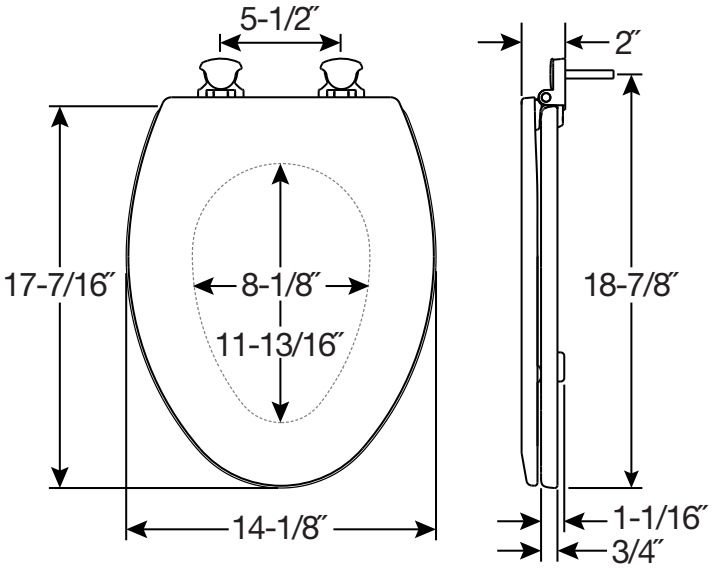

FEATURES:

- **Easy•Clean & Change®**
  Removes for easy cleaning

SPECIFICATIONS:

Size: Elongated

Material: Enameled Wood

Style: Closed Front with Cover

Ring Bumpers: Two

Hinges: Plastic

Hardware: Non-Corroding Bolts and Wing Nuts

Proudly Made in the USA

Eco-Friendly

Bemis Manufacturing Co., Sheboygan Falls, WI 53085 | ToiletSeats.com | ph: 800.558.7651 | fx: 800.292.3647

Bemis Manufacturing Co. reserves the right to make revisions without notice to product specifications.

©2018 0B7012492

500EC

RESIDENTIAL ENAMELED WOOD TOILET SEAT

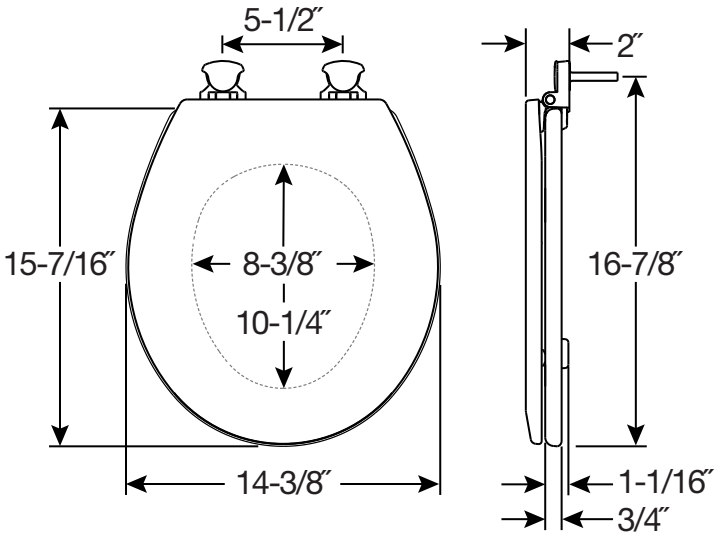

FEATURES:

- **Easy•Clean & Change®**
  Removes for easy cleaning

SPECIFICATIONS:

Size: Round

Material: Enameled Wood

Style: Closed Front with Cover

Ring Bumpers: Two

Hinges: Plastic

Hardware: Non-Corroding Bolts and Wing Nuts

Proudly Made in the USA

Eco-Friendly

Bemis Manufacturing Co., Sheboygan Falls, WI 53085 | ToiletSeats.com | ph: 800.558.7651 | fx: 800.292.3647

Bemis Manufacturing Co. reserves the right to make revisions without notice to product specifications.

©2018 0B7012492

1500TTT

RESIDENTIAL ENAMELED WOOD TOILET SEAT

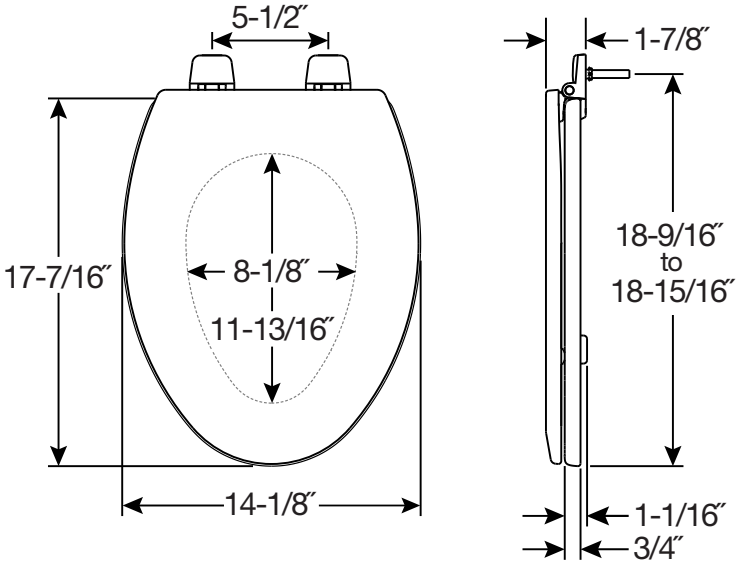

FEATURES:

- **Top-Tite STA-TITE® Seat Fastening System™**
  Never Loosens™
- **Precision Seat Fit™**
  ⅜″ front-to-back adjustability provides the perfect bowl fit

SPECIFICATIONS:

Size: Elongated

Material: Enameled Wood

Style: Closed Front with Cover

Ring Bumpers: Two

Hinges: Plastic

Hardware: Top-Tite STA-TITE® Seat Fastening System™ with Non-Corroding Bolts and Wing Nuts

Proudly Made in the USA

Eco-Friendly

Bemis Manufacturing Co., Sheboygan Falls, WI 53085 | ToiletSeats.com | ph: 800.558.7651 | fx: 800.292.3647

Bemis Manufacturing Co. reserves the right to make revisions without notice to product specifications.

©2018 0B7012491

500TTT

RESIDENTIAL ENAMELED WOOD TOILET SEAT

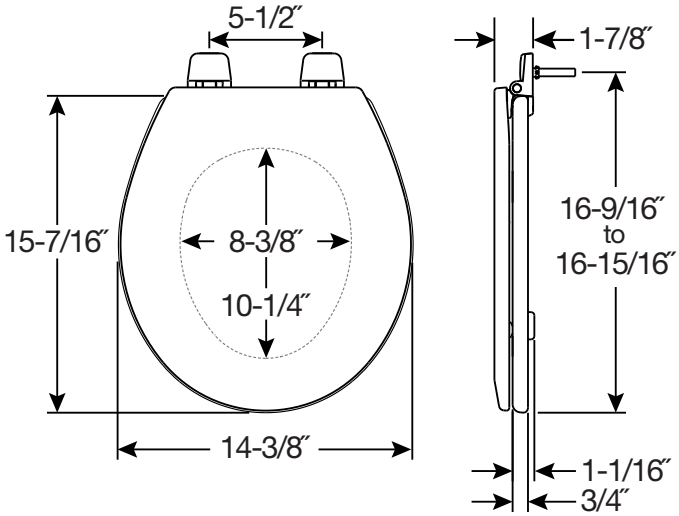

FEATURES:

- **Top-Tite STA-TITE® Seat Fastening System™**
  Never Loosens™
- **Precision Seat Fit™**
  ⅜″ front-to-back adjustability provides the perfect bowl fit

SPECIFICATIONS:

Size: Round

Material: Enameled Wood

Style: Closed Front with Cover

Ring Bumpers: Two

Hinges: Plastic

Hardware: Top-Tite STA-TITE® Seat Fastening System™ with Non-Corroding Bolts and Wing Nuts

Proudly Made in the USA

Eco-Friendly

Bemis Manufacturing Co., Sheboygan Falls, WI 53085 | ToiletSeats.com | ph: 800.558.7651 | fx: 800.292.3647

Bemis Manufacturing Co. reserves the right to make revisions without notice to product specifications.

©2018 0B7012491

1550TTT

RESIDENTIAL ENAMELED WOOD TOILET SEAT

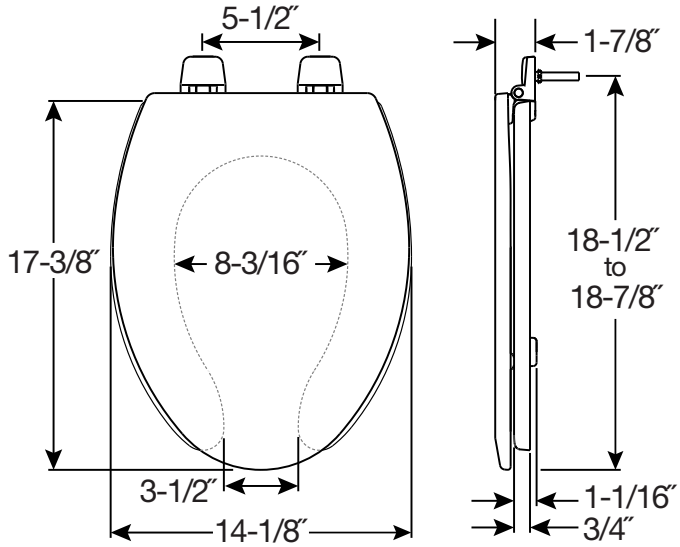

FEATURES:

- **Top-Tite STA-TITE® Seat Fastening System™**
  Never Loosens™
- **Precision Seat Fit™**
  ⅜″ front-to-back adjustability provides the perfect bowl fit

SPECIFICATIONS:

Size: Elongated

Material: Enameled Wood

Style: Open Front with Cover

Ring Bumpers: Two

Hinges: Plastic

Hardware: Top-Tite STA-TITE® Seat Fastening System™ with Non-Corroding Bolts and Wing Nuts

Proudly Made in the USA

Eco-Friendly

Bemis Manufacturing Co., Sheboygan Falls, WI 53085 | ToiletSeats.com | ph: 800.558.7651 | fx: 800.292.3647

Bemis Manufacturing Co. reserves the right to make revisions without notice to product specifications.
©2018 0B7012439

550TTT

RESIDENTIAL ENAMELED WOOD TOILET SEAT

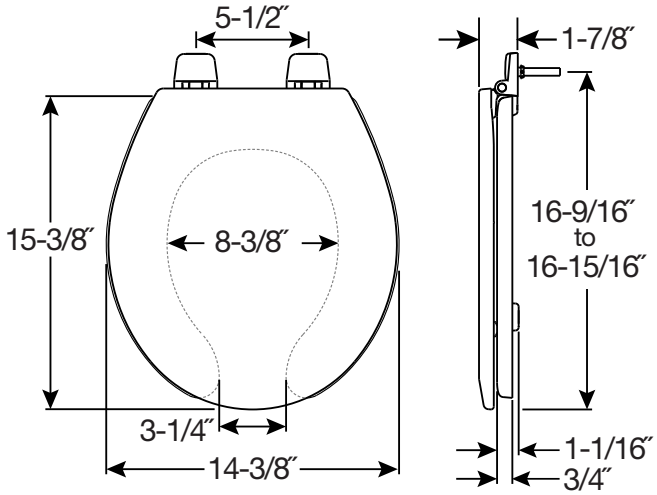

FEATURES:

- **Top-Tite STA-TITE® Seat Fastening System™**
  Never Loosens™
- **Precision Seat Fit™**
  ⅜″ front-to-back adjustability provides the perfect bowl fit

SPECIFICATIONS:

Size: Round

Material: Enameled Wood

Style: Open Front with Cover

Ring Bumpers: Two

Hinges: Plastic

Hardware: Top-Tite STA-TITE® Seat Fastening System™ with Non-Corroding Bolts and Wing Nuts

Proudly Made in the USA

Eco-Friendly

Bemis Manufacturing Co., Sheboygan Falls, WI 53085 | ToiletSeats.com | ph: 800.558.7651 | fx: 800.292.3647

Bemis Manufacturing Co. reserves the right to make revisions without notice to product specifications.

©2018 0B7012439

1400TTA

RESIDENTIAL ENAMELED WOOD TOILET SEAT

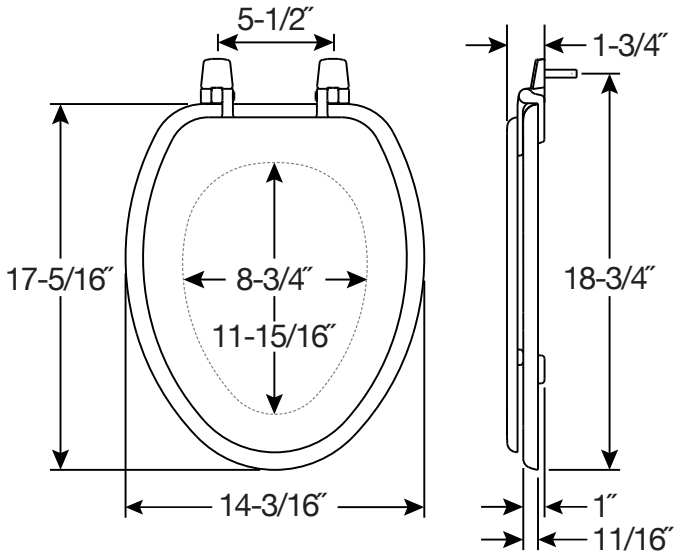

FEATURES:

- **Top-Tite® Hinges**
  Seat installs easily from above the bowl

SPECIFICATIONS:

Size: Elongated

Material: Enameled Wood

Style: Closed Front with Cover

Ring Bumpers: Two

Hinges: Plastic

Hardware: Non-Corroding Hex-Tite™ Bolts and Wing Nuts

Proudly Made in the USA

Eco-Friendly

Bemis Manufacturing Co., Sheboygan Falls, WI 53085 | ToiletSeats.com | ph: 800.558.7651 | fx: 800.292.3647

Bemis Manufacturing Co. reserves the right to make revisions without notice to product specifications.

©2018 0B7012448

400TTA

RESIDENTIAL ENAMELED WOOD TOILET SEAT

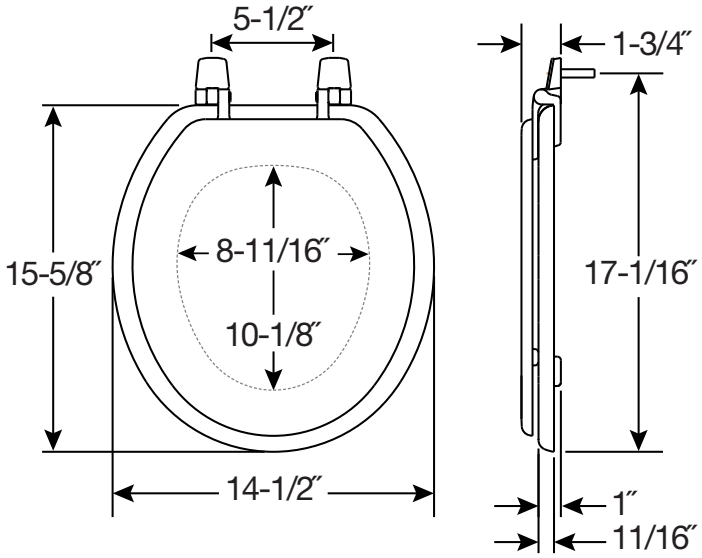

FEATURES:

- **Top-Tite® Hinges**
  Seat installs easily from above the bowl

SPECIFICATIONS:

Size: Round

Material: Enameled Wood

Style: Closed Front with Cover

Ring Bumpers: Two

Hinges: Plastic

Hardware: Non-Corroding Hex-Tite™ Bolts and Wing Nuts

Proudly Made in the USA

Eco-Friendly

Bemis Manufacturing Co., Sheboygan Falls, WI 53085 | ToiletSeats.com | ph: 800.558.7651 | fx: 800.292.3647

Bemis Manufacturing Co. reserves the right to make revisions without notice to product specifications.

©2018 0B7012448

ASHLAND™ 1600E4

RESIDENTIAL ENAMELED WOOD TOILET SEAT

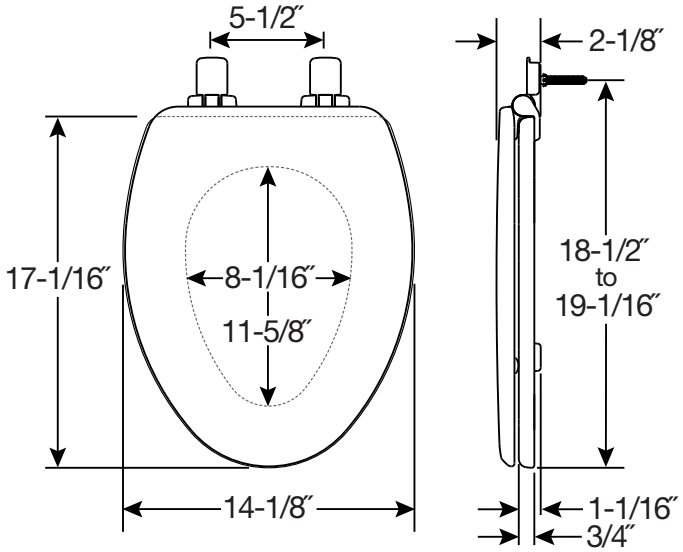

FEATURES:

- **STA-TITE®**
  Seat Fastening System™
  Never Loosens™
- **Easy•Clean™**
  Quickly removes for easy cleaning
- **Whisper•Close®**
  Slowly and quietly closes
- **Precision Seat Fit™**
  ½″ front-to-back adjustability provides the perfect bowl fit

SPECIFICATIONS:

Size: Elongated

Material: Enameled Wood

Style: Closed Front with Cover

Ring Bumpers: Two

Hinges: Plastic

Hardware: STA-TITE® Seat Fastening System™

Proudly Made in the USA

Eco-Friendly

Bemis Manufacturing Co., Sheboygan Falls, WI 53085 | ToiletSeats.com | ph: 800.558.7651 | fx: 800.292.3647

Bemis Manufacturing Co. reserves the right to make revisions without notice to product specifications.

©2019 0B7012515

ASHLAND™ 600E4

RESIDENTIAL ENAMELED WOOD TOILET SEAT

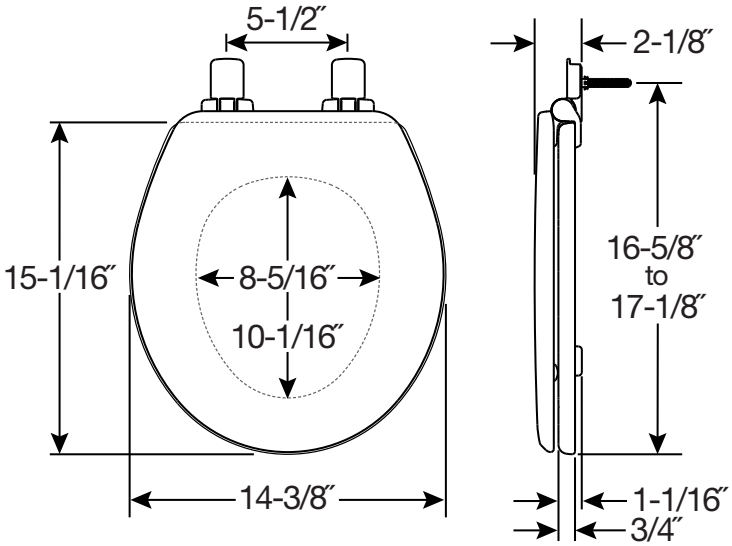

FEATURES:

- **STA-TITE®**
  Seat Fastening System™
  Never Loosens™
- **Easy•Clean™**
  Quickly removes for easy cleaning
- **Whisper•Close®**
  Slowly and quietly closes
- **Precision Seat Fit™**
  ½″ front-to-back adjustability provides the perfect bowl fit

SPECIFICATIONS:

Size: Round

Material: Enameled Wood

Style: Closed Front with Cover

Ring Bumpers: Two

Hinges: Plastic

Hardware: STA-TITE® Seat Fastening System™

Proudly Made in the USA

Eco-Friendly

Bemis Manufacturing Co., Sheboygan Falls, WI 53085 | ToiletSeats.com | ph: 800.558.7651 | fx: 800.292.3647

Bemis Manufacturing Co. reserves the right to make revisions without notice to product specifications.

©2019 0B7012515

ALËSIO II™ 19170CHSL / NISL

RESIDENTIAL HIGH DENSITY™
ENAMELED WOOD TOILET SEAT

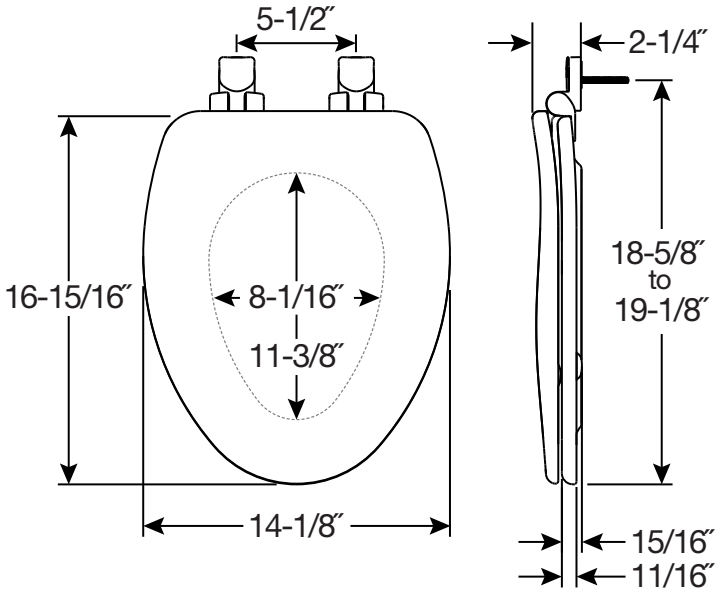

FEATURES:

- **Stylish Hinge Options**
  Chrome (CHSL) or brushed nickel (NISL) hinges
- **STA-TITE®**
  Seat Fastening System™
  Never Loosens™
- **Easy•Clean & Change®**
  Removes for easy cleaning
- **Whisper•Close®**
  Slowly and quietly closes
- **Precision Seat Fit™**
  ½″ front-to-back adjustability provides the perfect bowl fit
- **Super Grip Bumpers™**
  Provides greater stability
- **Highly-Stylized Design**
  Superior high-gloss finish resists chipping and scratching

SPECIFICATIONS:

Size: Elongated

Material: High Density™ Enameled Wood

Style: Closed Front with Cover

Ring Bumpers: Two

Hinges: Chrome or Brushed Nickel

Hardware: STA-TITE® Seat Fastening System™

Proudly Made in the USA

Eco-Friendly

Bemis Manufacturing Co., Sheboygan Falls, WI 53085 | ToiletSeats.com | ph: 800.558.7651 | fx: 800.292.3647

Bemis Manufacturing Co. reserves the right to make revisions without notice to product specifications.
©2018 0B7012466

ALËSIO II™ 9170CHSL / NISL

RESIDENTIAL HIGH DENSITY™
ENAMELED WOOD TOILET SEAT

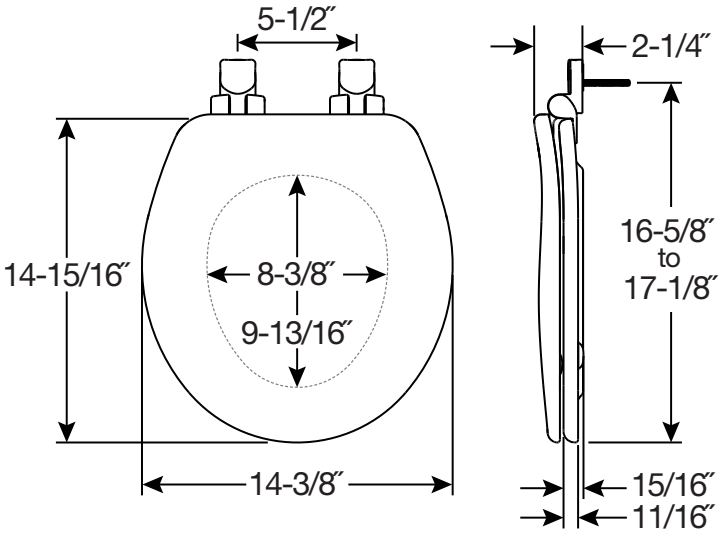

FEATURES:

- **Stylish Hinge Options**
  Chrome (CHSL) or brushed nickel (NISL) hinges
- **STA-TITE® Seat Fastening System™**
  Never Loosens™
- **Easy•Clean & Change®**
  Removes for easy cleaning
- **Whisper•Close®**
  Slowly and quietly closes
- **Precision Seat Fit™**
  ½″ front-to-back adjustability provides the perfect bowl fit
- **Super Grip Bumpers™**
  Provides greater stability
- **Highly-Stylized Design**
  Superior high-gloss finish resists chipping and scratching

SPECIFICATIONS:

Size: Round

Material: High Density™ Enameled Wood

Style: Closed Front with Cover

Ring Bumpers: Two

Hinges: Chrome or Brushed Nickel

Hardware: STA-TITE® Seat Fastening System™

Proudly Made in the USA

Eco-Friendly

Bemis Manufacturing Co., Sheboygan Falls, WI 53085 | ToiletSeats.com | ph: 800.558.7651 | fx: 800.292.3647

Bemis Manufacturing Co. reserves the right to make revisions without notice to product specifications.
©2018 0B7012466

ALËSIO II™ 19170PLE4

RESIDENTIAL HIGH DENSITY™
ENAMELED WOOD TOILET SEAT

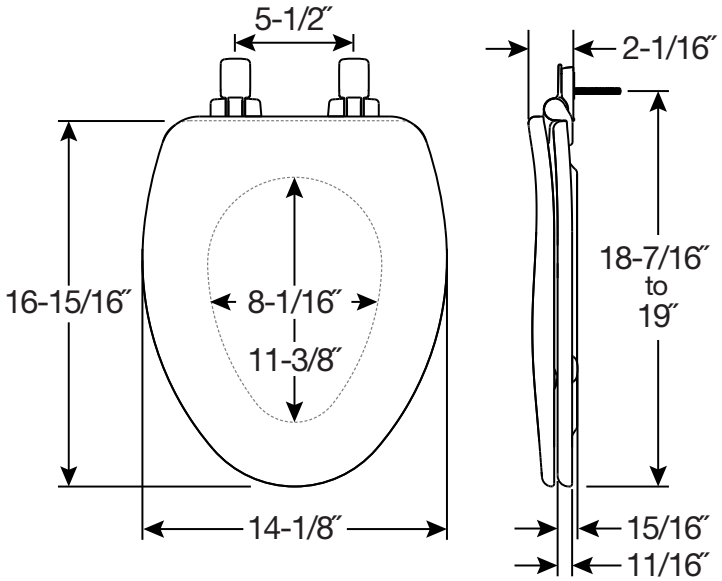

FEATURES:

- **STA-TITE®**
  Seat Fastening System™
  Never Loosens™
- **Easy•Clean™**
  Quickly removes for easy cleaning
- **Whisper•Close®**
  Slowly and quietly closes
- **Precision Seat Fit™**
  ½″ front-to-back adjustability provides the perfect bowl fit
- **Super Grip Bumpers™**
  Provides greater stability
- **Highly-Stylized Design**
  Superior high-gloss finish resists chipping and scratching

SPECIFICATIONS:

Size: Elongated

Material: High Density™ Enameled Wood

Style: Closed Front with Cover

Ring Bumpers: Two

Hinges: Plastic

Hardware: STA-TITE® Seat Fastening System™

Proudly Made in the USA

Eco-Friendly

Bemis Manufacturing Co., Sheboygan Falls, WI 53085 | ToiletSeats.com | ph: 800.558.7651 | fx: 800.292.3647

Bemis Manufacturing Co. reserves the right to make revisions without notice to product specifications.
©2020 0B7012525

ALËSIO II™ 9170PLE4

RESIDENTIAL HIGH DENSITY™
ENAMELED WOOD TOILET SEAT

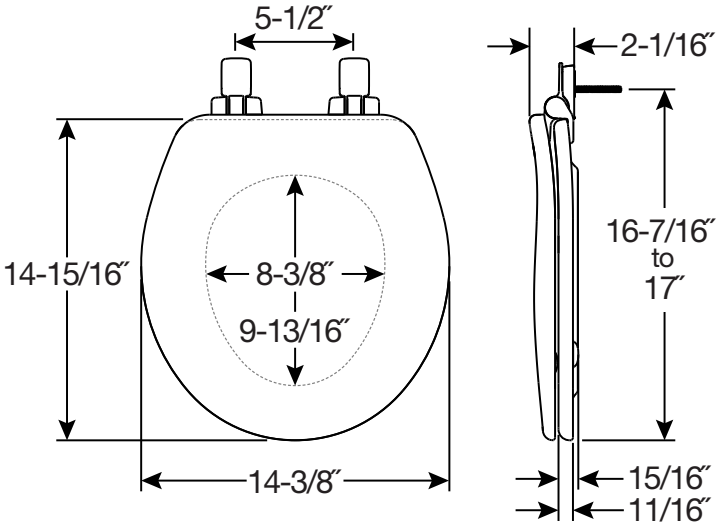

FEATURES:

- **STA-TITE®**
  Seat Fastening System™
  Never Loosens™
- **Easy•Clean™**
  Quickly removes for easy cleaning
- **Whisper•Close®**
  Slowly and quietly closes
- **Precision Seat Fit™**
  ½″ front-to-back adjustability provides the perfect bowl fit
- **Super Grip Bumpers™**
  Provides greater stability
- **Highly-Stylized Design**
  Superior high-gloss finish resists chipping and scratching

SPECIFICATIONS:

Size: Round

Material: High Density™ Enameled Wood

Style: Closed Front with Cover

Ring Bumpers: Two

Hinges: Plastic

Hardware: STA-TITE® Seat Fastening System™

Proudly Made in the USA

Eco-Friendly

Bemis Manufacturing Co., Sheboygan Falls, WI 53085 | ToiletSeats.com | ph: 800.558.7651 | fx: 800.292.3647

Bemis Manufacturing Co. reserves the right to make revisions without notice to product specifications.
©2020 0B7012525

NEXTSTEP2™ 1485E4

RESIDENTIAL ENAMELED WOOD TOILET SEAT

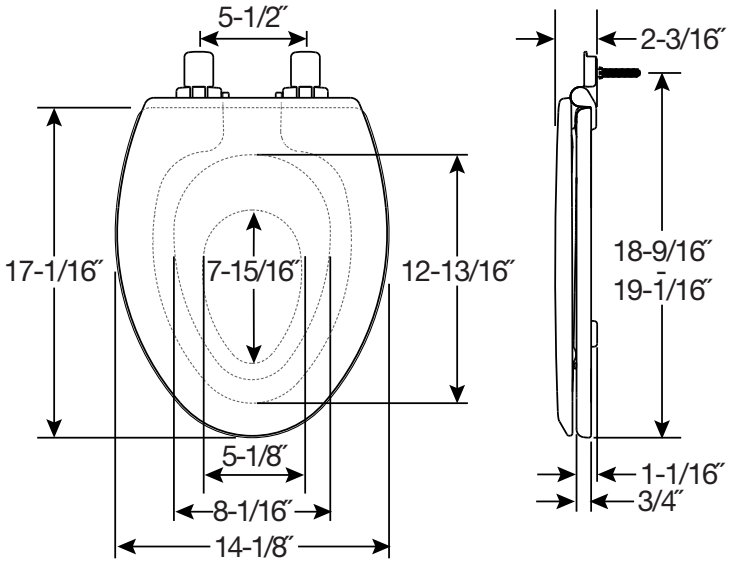

FEATURES:

- **Built-In Potty Seat™**
  Secures magnetically in cover when not in use
- **Fits Both Adults and Children**
  2-in-1 toilet seat accommodates the needs of both adult and child
- **Plastic Child Seat**
  Easily removes for cleaning or when no longer needed
- **STA-TITE® Seat Fastening System™**
  Never Loosens™
- **Easy•Clean™**
  Quickly removes for easy cleaning
- **Whisper•Close®**
  Slowly and quietly closes
- **Precision Seat Fit™**
  ½″ front-to-back adjustability provides the perfect bowl fit

SPECIFICATIONS:

Size: Elongated

Material: Enameled Wood / Plastic

Style: Closed Front with Cover

Ring Bumpers: Two

Hinges: Plastic

Hardware: STA-TITE® Seat Fastening System™

Proudly Made in the USA

Eco-Friendly

Bemis Manufacturing Co., Sheboygan Falls, WI 53085 | ToiletSeats.com | ph: 800.558.7651 | fx: 800.292.3647

Bemis Manufacturing Co. reserves the right to make revisions without notice to product specifications.

©2020 0B7012522

NEXTSTEP2™ 485E4

RESIDENTIAL ENAMELED WOOD TOILET SEAT

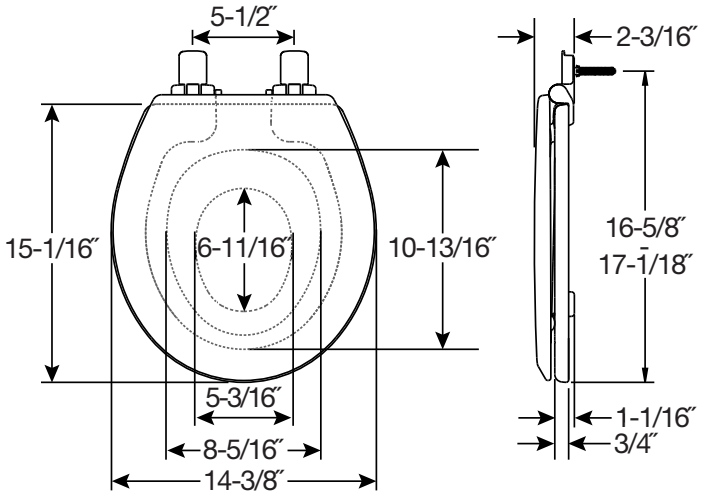

FEATURES:

- **Built-In Potty Seat™**
  Secures magnetically in cover when not in use
- **Fits Both Adults and Children**
  2-in-1 toilet seat accommodates the needs of both adult and child
- **Plastic Child Seat**
  Easily removes for cleaning or when no longer needed
- **STA-TITE® Seat Fastening System™**
  Never Loosens™
- **Easy•Clean™**
  Quickly removes for easy cleaning
- **Whisper•Close®**
  Slowly and quietly closes
- **Precision Seat Fit™**
  ½″ front-to-back adjustability provides the perfect bowl fit

SPECIFICATIONS:

Size: Round

Material: Enameled Wood / Plastic

Style: Closed Front with Cover

Ring Bumpers: Two

Hinges: Plastic

Hardware: STA-TITE® Seat Fastening System™

Proudly Made in the USA

Eco-Friendly

Bemis Manufacturing Co., Sheboygan Falls, WI 53085 | ToiletSeats.com | ph: 800.558.7651 | fx: 800.292.3647

Bemis Manufacturing Co. reserves the right to make revisions without notice to product specifications.

©2020 0B7012522

TC50TTA

MARINE ENAMELED WOOD TOILET SEAT

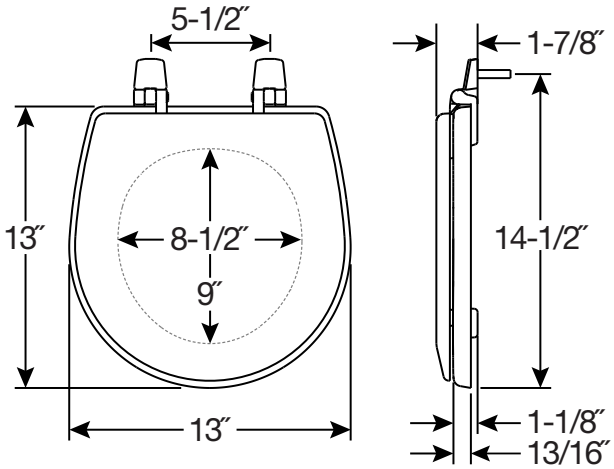

FEATURES:

- **Top-Tite® Hinges**
  Seat installs easily from above the bowl

SPECIFICATIONS:

Size: Marine

Material: Enameled Wood

Style: Closed Front with Cover

Ring Bumpers: Two

Hinges: Plastic

Hardware: Non-Corroding Hex-Tite™ Bolts and Wing Nuts

Proudly Made in the USA

Eco-Friendly

Bemis Manufacturing Co., Sheboygan Falls, WI 53085 | ToiletSeats.com | ph: 800.558.7651 | fx: 800.292.3647

Bemis Manufacturing Co. reserves the right to make revisions without notice to product specifications.

©2018 0B7012450

BB540

RESIDENTIAL ENAMELED WOOD TOILET SEAT

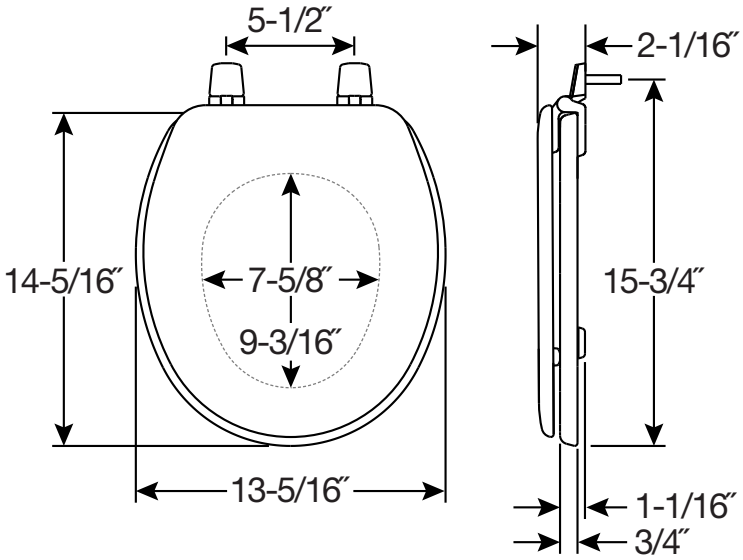

FEATURES:

- **Top-Tite® Hinges**
  Seat installs easily from above the bowl

SPECIFICATIONS:

Size: Baby / Toddler

Material: Enameled Wood

Style: Closed Front with Cover

Ring Bumpers: Two

Hinges: Plastic

Hardware: Non-Corroding Hex-Tite™ Bolts and Wing Nuts

Fits: American Standard® Baby Devoro and Eljer® toddler-size toilets

Proudly Made in the USA

Eco-Friendly

Bemis Manufacturing Co., Sheboygan Falls, WI 53085 | ToiletSeats.com | ph: 800.558.7651 | fx: 800.292.3647

Bemis Manufacturing Co. reserves the right to make revisions without notice to product specifications.

©2018 0B7012459

NW209E10

RESIDENTIAL ENAMELED WOOD TOILET SEAT

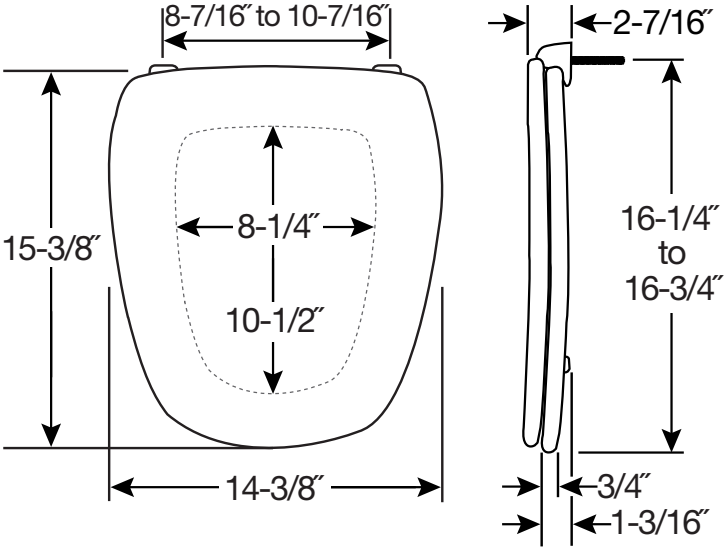

FEATURES:

- **Precision Seat Fit™**
  ½″ front-to-back adjustability provides the perfect bowl fit
- **8-7⁄16″ to 10-7⁄16″ Bolt Spread**
  Fits American Standard® Norwall F2090 bowls

SPECIFICATIONS:

Size: Round

Material: Enameled Wood

Style: Closed Front with Cover

Ring Bumpers: Two

Hinges: Plastic

Hardware: Non-Corroding Bolts and Nuts

Fits: American Standard® Norwall F2090 Bowls

Proudly Made in the USA

Eco-Friendly

Bemis Manufacturing Co., Sheboygan Falls, WI 53085 | ToiletSeats.com | ph: 800.558.7651 | fx: 800.292.3647

Bemis Manufacturing Co. reserves the right to make revisions without notice to product specifications.

©2018 0B7012451

BEMIS®

RESIDENTIAL PLASTIC

RADIANCE™ H1900NL

RESIDENTIAL PLASTIC TOILET SEAT

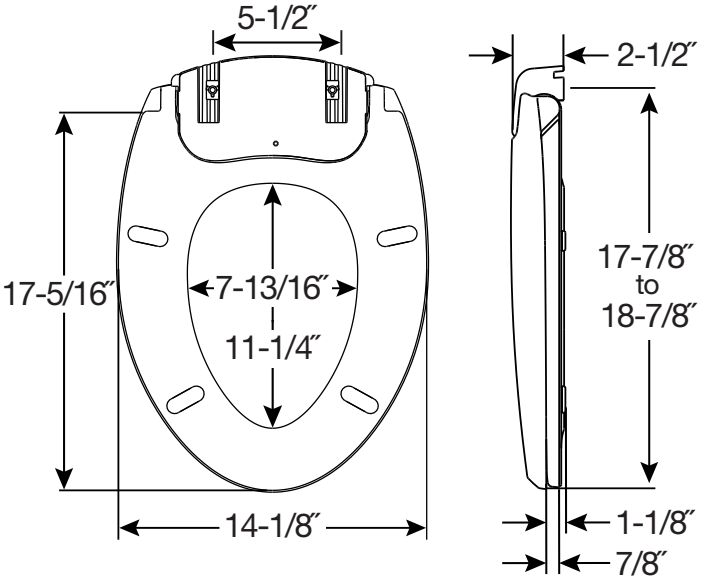

FEATURES:

- **Multi-Setting Warming Seat**
  3 temperature settings for comfort
- **iLumaLight®**
  Blue LED night light illuminates with a soft, soothing glow
- **STA-TITE® Seat Fastening System™**
  Never Loosens™
- **Whisper•Close®**
  Slowly and quietly closes
- **Precision Seat Fit™**
  1″ front-to-back adjustability provides the perfect bowl fit
- **Super Grip Bumpers™**
  Provides greater stability

SPECIFICATIONS:

Size: Elongated

Material: Plastic

Style: Closed Front with Cover

Ring Bumpers: Four

Hinges: Plastic

Hardware: STA-TITE® Seat Fastening System™

Power Rating: AC 120V, 60Hz

Rated Power Consumption: 55W

Power Cord Length: 48″

Power Requirement: GFCI Outlet

Codes & Standards: Complies with IAPMO/ANSI Z124.5 Standards Residential Classification

Bemis Manufacturing Co. reserves the right to make revisions without notice to product specifications.
©2018 0B7012456

RADIANCE™ H900NL

RESIDENTIAL PLASTIC TOILET SEAT

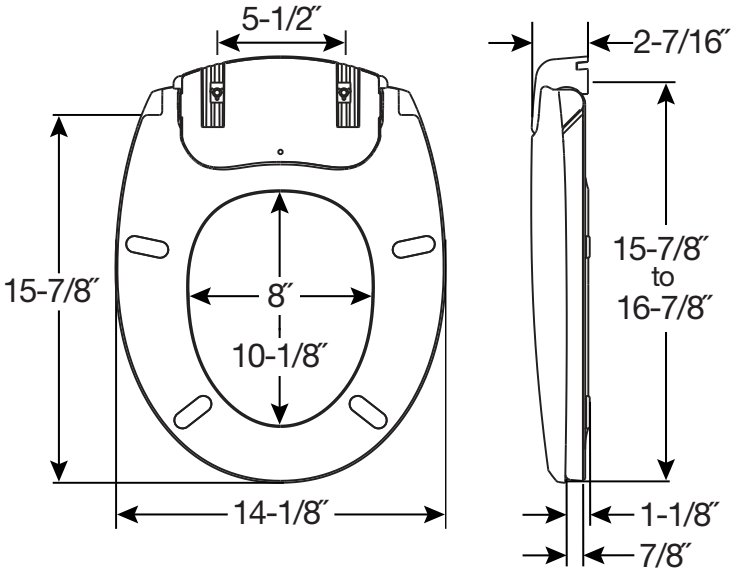

FEATURES:

- **Multi-Setting Warming Seat**
  3 temperature settings for comfort
- **iLumaLight®**
  Blue LED night light illuminates with a soft, soothing glow
- **STA-TITE® Seat Fastening System™**
  Never Loosens™
- **Whisper•Close®**
  Slowly and quietly closes
- **Precision Seat Fit™**
  1″ front-to-back adjustability provides the perfect bowl fit
- **Super Grip Bumpers™**
  Provides greater stability

SPECIFICATIONS:

Size: Round

Material: Plastic

Style: Closed Front with Cover

Ring Bumpers: Four

Hinges: Plastic

Hardware: STA-TITE® Seat Fastening System™

Power Rating: AC 120V, 60Hz

Rated Power Consumption: 55W

Power Cord Length: 48″

Power Requirement: GFCI Outlet

Codes & Standards: Complies with IAPMO/ANSI Z124.5 Standards Residential Classification

Bemis Manufacturing Co. reserves the right to make revisions without notice to product specifications.
©2018 0B7012456

RENEW™ B1940

RESIDENTIAL PLASTIC TOILET SEAT

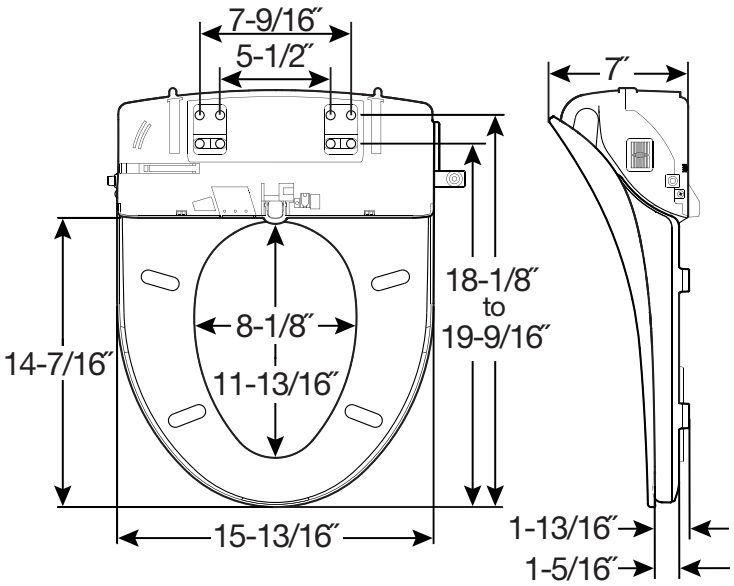

FEATURES:

- Adjustable Aerated Washes
- Continuous Heated Water
- 3-in-1 Stainless Steel Nozzle
- Pulsate Wash Function
- Multi-Setting Heated Seat
- Intuitive Touch Remote Control with Custom User Presets
- Eco Mode
- Easy•Clean & Change®
- Whisper•Close®
- Precision Seat Fit™
- Super Grip Bumpers™

SPECIFICATIONS:

Size: Elongated

Material: Plastic

Style: Closed Front with Cover

Ring Bumpers: Four

Hinges: Plastic

Hardware: Seat Bracket & Adjustable Hardware

Power Rating: AC 120V, 60Hz, 1270W, 10.58 amps

Power Cord Length: 48″

Bidet Water Hose Length: 24″

Power Requirement: GFCI Outlet

Remote Dimensions: 2⅜″ x 6⅜″ x ¾″

Codes & Standards: UPC Complies with IAPMO/ANSI Z124.5 Standards Residential Classification; c UL us

Bemis Manufacturing Co. reserves the right to make revisions without notice to product specifications.
©2019 0B7012461A

ADDITIONAL SPECIFICATIONS:

Water Feed Method: Directly Connected to Water Supply Valve

Recommended Water Pressure Supply: 10 ~ 107 psi

WASH FEATURE:

Feed Volume for Front, Rear, & Intense Washes: .185 gpm

Water Pressure Control: 5-level Control

Temperature Control: Room Temp. ~ 100˚F

Water Heater Capacity: 1200W

Safety Device: Temp. Fuse, Thermo Switch

HEATED SEAT FEATURE:

Temperature Control: Room Temp. ~ 108˚F

Seat Heater Capacity: 55W

Safety Device: Temp. Fuse

Bemis Manufacturing Co. reserves the right to make revisions without notice to product specifications.
©2019 0B7012461A

RENEW™ B940

RESIDENTIAL PLASTIC TOILET SEAT

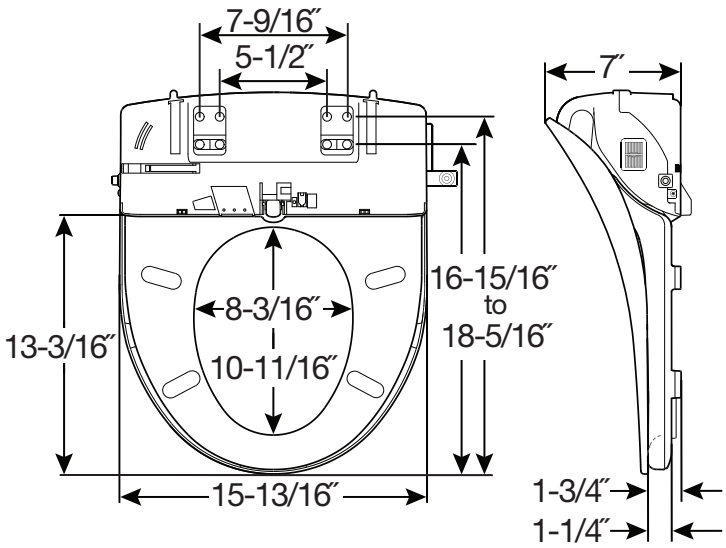

FEATURES:

- Adjustable Aerated Washes
- Continuous Heated Water
- 3-in-1 Stainless Steel Nozzle
- Pulsate Wash Function
- Multi-Setting Heated Seat
- Intuitive Touch Remote Control with Custom User Presets
- Eco Mode
- Easy•Clean & Change®
- Whisper•Close®
- Precision Seat Fit™
- Super Grip Bumpers™

SPECIFICATIONS:

Size: Round

Material: Plastic

Style: Closed Front with Cover

Ring Bumpers: Four

Hinges: Plastic

Hardware: Seat Bracket & Adjustable Hardware

Power Rating: AC 120V, 60Hz, 1270W, 10.58 amps

Power Cord Length: 48″

Bidet Water Hose Length: 24″

Power Requirement: GFCI Outlet

Remote Dimensions: 2⅜″ x 6⅜″ x ¾″

Codes & Standards: UPC Complies with IAPMO/ANSI Z124.5 Standards Residential Classification; c UL us

Bemis Manufacturing Co. reserves the right to make revisions without notice to product specifications.
©2019 0B7012463A

ADDITIONAL SPECIFICATIONS:

Water Feed Method: Directly Connected to Water Supply Valve

Recommended Water Pressure Supply: 10 ~ 107 psi

WASH FEATURE:

Feed Volume for Front, Rear, & Intense Washes: .185 gpm

Water Pressure Control: 5-level Control

Temperature Control: Room Temp. ~ 100˚F

Water Heater Capacity: 1200W

Safety Device: Temp. Fuse, Thermo Switch

HEATED SEAT FEATURE:

Temperature Control: Room Temp. ~ 108˚F

Seat Heater Capacity: 55W

Safety Device: Temp. Fuse

Bemis Manufacturing Co. reserves the right to make revisions without notice to product specifications.
©2019 0B7012463A

RENEW PLUS™ B1980NL

RESIDENTIAL PLASTIC TOILET SEAT

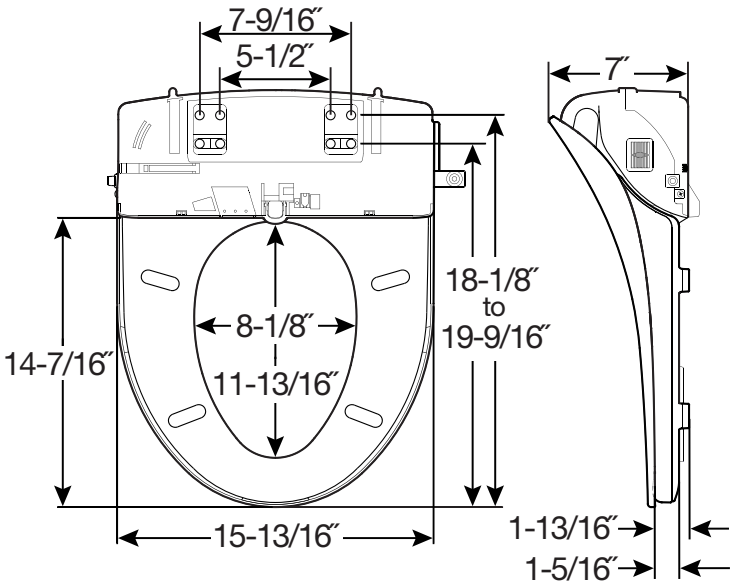

FEATURES:

- Adjustable Aerated Washes
- Continuous Heated Water
- Multi-Setting Warm Air Dryer
- 3-in-1 Stainless Steel Nozzle
- Pulsate & Oscillate Wash Functions
- Automatic Deodorizer
- Multi-Setting Heated Seat
- iLumaLight®
- Intuitive Touch Remote Control with Custom User Presets
- Eco Mode
- Easy•Clean & Change®
- Whisper•Close®
- Precision Seat Fit™
- Super Grip Bumpers™

SPECIFICATIONS:

Size: Elongated

Material: Plastic

Style: Closed Front with Cover

Ring Bumpers: Four

Hinges: Plastic

Hardware: Seat Bracket & Adjustable Hardware

Power Rating: AC 120V, 60Hz, 1270W, 10.58 amps

Power Cord Length: 48″

Bidet Water Hose Length: 24″

Power Requirement: GFCI Outlet

Remote Dimensions: 2⅜″ x 6⅜″ x ¾″

Codes & Standards: Complies with IAPMO/ANSI Z124.5 Standards Residential Classification

Bemis Manufacturing Co., Sheboygan Falls, WI 53085 | ToiletSeats.com | ph: 800.558.7651 | fx: 800.292.3647

Bemis Manufacturing Co. reserves the right to make revisions without notice to product specifications.
©2019 0B7012460A

ADDITIONAL SPECIFICATIONS:

Water Feed Method: Directly Connected to Water Supply Valve

Recommended Water Pressure Supply: 10 ~ 107 psi

WASH FEATURE:

Feed Volume for Front, Rear, & Intense Washes: .185 gpm

Water Pressure Control: 5-level Control

Temperature Control: Room Temp. ~ 100˚F

Water Heater Capacity: 1200W

Safety Device: Temp. Fuse, Thermo Switch

HEATED SEAT FEATURE:

Temperature Control: Room Temp. ~ 108˚F

Seat Heater Capacity: 55W

Safety Device: Temp. Fuse

DRY FEATURE:

Temperature Control: Room Temp. ~ 122˚F

Heater Capacity: 250W

Safety Device: Temp. Fuse, Bi-metal (overheating prevention)

Deodorization: Catalytic Deodorization

Bemis Manufacturing Co. reserves the right to make revisions without notice to product specifications.

©2019 0B7012460A

RENEW PLUS™ B980NL

RESIDENTIAL PLASTIC TOILET SEAT

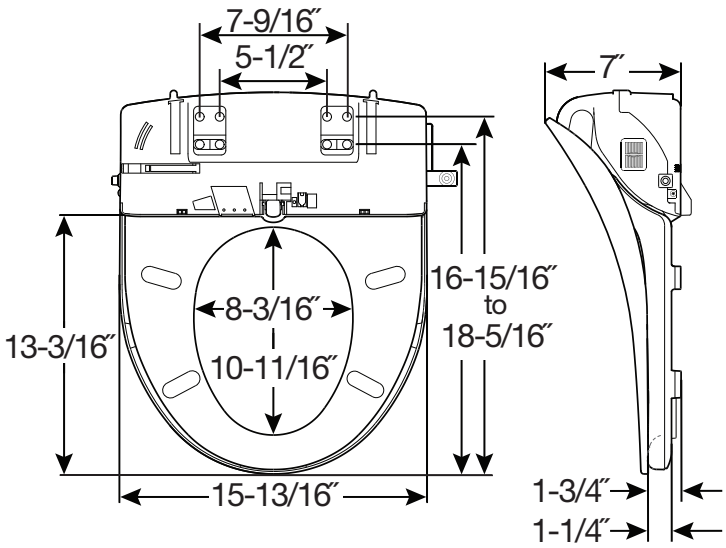

FEATURES:

- Adjustable Aerated Washes
- Continuous Heated Water
- Multi-Setting Warm Air Dryer
- 3-in-1 Stainless Steel Nozzle
- Pulsate & Oscillate Wash Functions
- Automatic Deodorizer
- Multi-Setting Heated Seat
- iLumaLight®
- Intuitive Touch Remote Control with Custom User Presets
- Eco Mode
- Easy•Clean & Change®
- Whisper•Close®
- Precision Seat Fit™
- Super Grip Bumpers™

SPECIFICATIONS:

Size: Round

Material: Plastic

Style: Closed Front with Cover

Ring Bumpers: Four

Hinges: Plastic

Hardware: Seat Bracket & Adjustable Hardware

Power Rating: AC 120V, 60Hz, 1270W, 10.58 amps

Power Cord Length: 48″

Bidet Water Hose Length: 24″

Power Requirement: GFCI Outlet

Remote Dimensions: 2⅜″ x 6⅜″ x ¾″

Codes & Standards: Complies with IAPMO/ANSI Z124.5 Standards Residential Classification

Bemis Manufacturing Co., Sheboygan Falls, WI 53085 | ToiletSeats.com | ph: 800.558.7651 | fx: 800.292.3647

Bemis Manufacturing Co. reserves the right to make revisions without notice to product specifications.
©2019 0B7012462A

ADDITIONAL SPECIFICATIONS:

Water Feed Method: Directly Connected to Water Supply Valve

Recommended Water Pressure Supply: 10 ~ 107 psi

WASH FEATURE:

Feed Volume for Front, Rear, & Intense Washes: .185 gpm

Water Pressure Control: 5-level Control

Temperature Control: Room Temp. ~ 100˚F

Water Heater Capacity: 1200W

Safety Device: Temp. Fuse, Thermo Switch

HEATED SEAT FEATURE:

Temperature Control: Room Temp. ~ 108˚F

Seat Heater Capacity: 55W

Safety Device: Temp. Fuse

DRY FEATURE:

Temperature Control: Room Temp. ~ 122˚F

Heater Capacity: 250W

Safety Device: Temp. Fuse, Bi-metal (overheating prevention)

Deodorization: Catalytic Deodorization

Bemis Manufacturing Co. reserves the right to make revisions without notice to product specifications.

©2019 0B7012462A

AFFINITY™ 1200E4

RESIDENTIAL PLASTIC TOILET SEAT

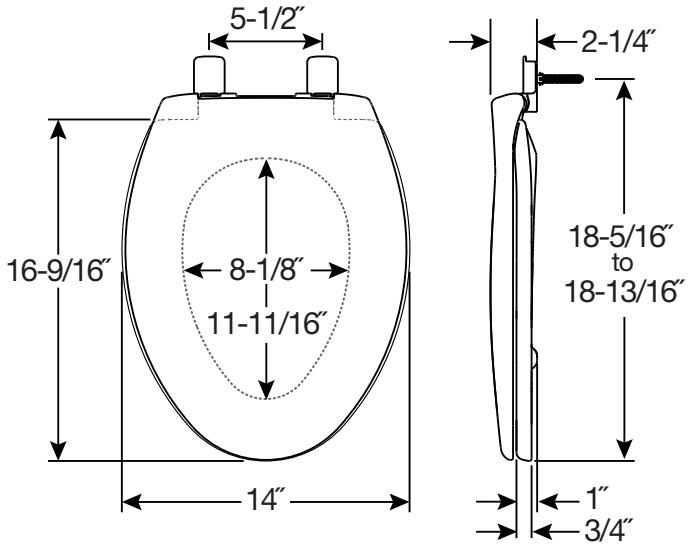

FEATURES:

- **STA-TITE®**
  Seat Fastening System™
  Never Loosens™
- **Easy•Clean & Change®**
  Removes for cleaning
- **Whisper•Close®**
  Slowly and quietly closes
- **Precision Seat Fit™**
  ½″ front-to-back adjustability provides the perfect bowl fit
- **Super Grip Bumpers™**
  Provides greater stability

SPECIFICATIONS:

Size: Elongated

Material: Plastic

Style: Closed Front with Cover

Ring Bumpers: Two

Hinges: Plastic

Hardware: STA-TITE® Seat Fastening System™

Codes & Standards: Complies with IAPMO/ANSI Z124.5 Standards Residential Classification

Proudly Made in the USA

Eco-Friendly

Bemis Manufacturing Co., Sheboygan Falls, WI 53085 | ToiletSeats.com | ph: 800.558.7651 | fx: 800.292.3647

Bemis Manufacturing Co. reserves the right to make revisions without notice to product specifications.

©2018 0B7012444A

AFFINITY™ 200E4

RESIDENTIAL PLASTIC TOILET SEAT

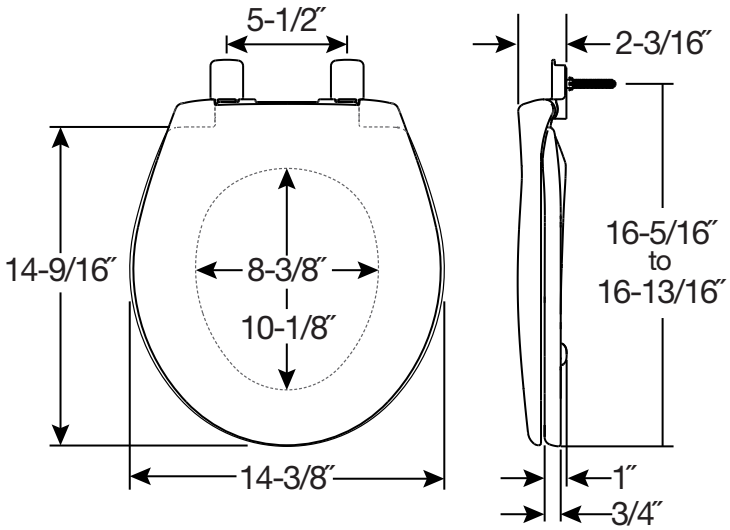

FEATURES:

- **STA-TITE®**
  Seat Fastening System™
  Never Loosens™
- **Easy•Clean & Change®**
  Removes for cleaning
- **Whisper•Close®**
  Slowly and quietly closes
- **Precision Seat Fit™**
  ½″ front-to-back adjustability provides the perfect bowl fit
- **Super Grip Bumpers™**
  Provides greater stability

SPECIFICATIONS:

Size: Round

Material: Plastic

Style: Closed Front with Cover

Ring Bumpers: Two

Hinges: Plastic

Hardware: STA-TITE® Seat Fastening System™

Codes & Standards: Complies with IAPMO/ANSI Z124.5 Standards Residential Classification

Proudly Made in the USA

Eco-Friendly

Bemis Manufacturing Co., Sheboygan Falls, WI 53085 | ToiletSeats.com | ph: 800.558.7651 | fx: 800.292.3647

Bemis Manufacturing Co. reserves the right to make revisions without notice to product specifications.

©2018 0B7012444A

1200SLOWT

RESIDENTIAL PLASTIC TOILET SEAT

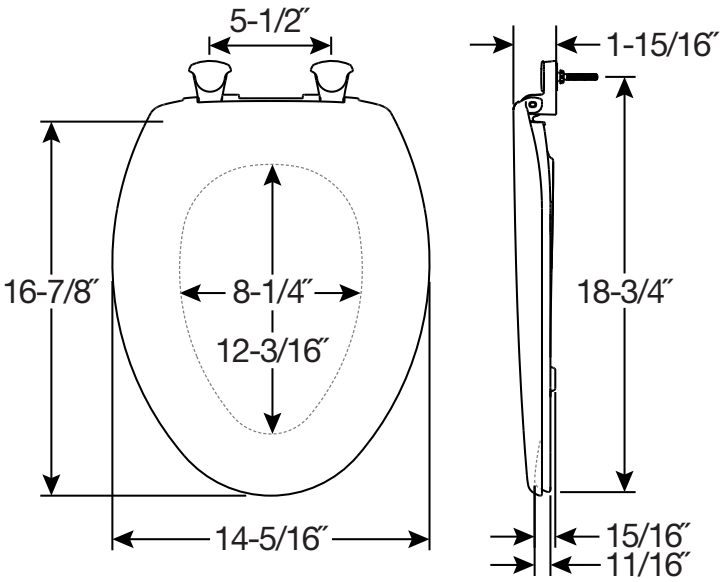

FEATURES:

- **STA-TITE®**
  Seat Fastening System™
  Never Loosens™
- **Easy•Clean & Change®**
  Removes for easy cleaning
- **Whisper•Close®**
  Slowly and quietly closes

SPECIFICATIONS:

Size: Elongated

Material: Plastic

Style: Closed Front with Cover

Ring Bumpers: Four

Hinges: Plastic

Hardware: STA-TITE® Seat Fastening System™

Codes & Standards: Complies with IAPMO/ANSI Z124.5 Performance Standards Residential

Proudly Made in the USA

Eco-Friendly

Bemis Manufacturing Co., Sheboygan Falls, WI 53085 | ToiletSeats.com | ph: 800.558.7651 | fx: 800.292.3647

Bemis Manufacturing Co. reserves the right to make revisions without notice to product specifications.

©2019 0B7012445A

200SLOWT

RESIDENTIAL PLASTIC TOILET SEAT

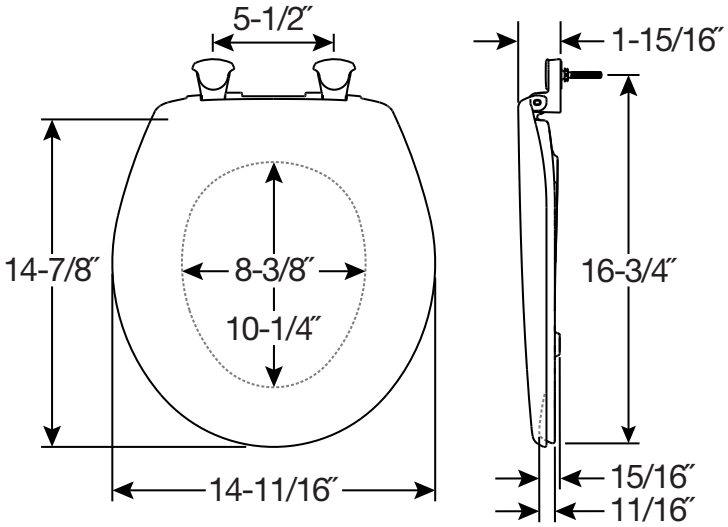

FEATURES:

- **STA-TITE®**
  Seat Fastening System™
  Never Loosens™
- **Easy•Clean & Change®**
  Removes for easy cleaning
- **Whisper•Close®**
  Slowly and quietly closes

SPECIFICATIONS:

Size: Round

Material: Plastic

Style: Closed Front with Cover

Ring Bumpers: Four

Hinges: Plastic

Hardware: STA-TITE® Seat Fastening System™

Codes & Standards: Complies with IAPMO/ANSI Z124.5 Performance Standards Residential

Proudly Made in the USA

Eco-Friendly

Bemis Manufacturing Co., Sheboygan Falls, WI 53085 | ToiletSeats.com | ph: 800.558.7651 | fx: 800.292.3647

Bemis Manufacturing Co. reserves the right to make revisions without notice to product specifications.

©2019 0B7012445A

1200TCA

RESIDENTIAL PLASTIC TOILET SEAT

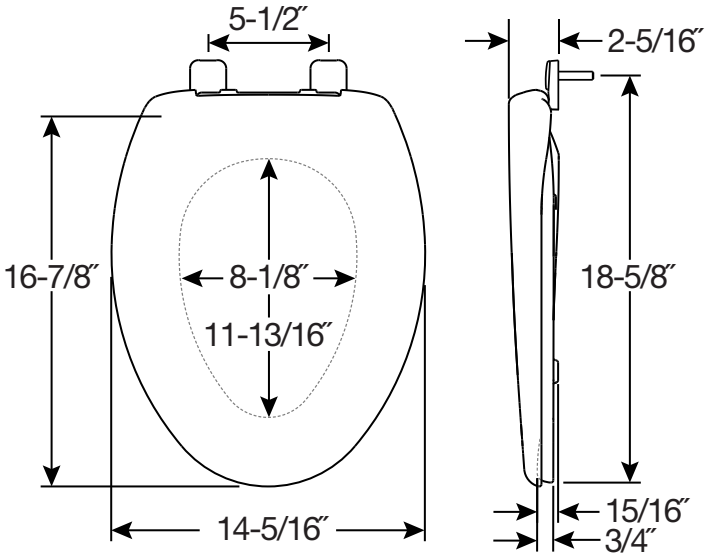

FEATURES:

- **Top-Tite® Hinges**
  Seat installs easily from above the bowl

SPECIFICATIONS:

Size: Elongated

Material: Plastic

Style: Closed Front with Cover

Ring Bumpers: Four

Hinges: Plastic

Hardware: Non-Corroding Hex-Tite™ Bolts and Wing Nuts

Codes & Standards: Complies with IAPMO/ANSI Z124.5 Performance Standards Residential

Proudly Made in the USA

Eco-Friendly

Bemis Manufacturing Co., Sheboygan Falls, WI 53085 | ToiletSeats.com | ph: 800.558.7651 | fx: 800.292.3647

Bemis Manufacturing Co. reserves the right to make revisions without notice to product specifications.

©2018 0B7012446

200TCA

RESIDENTIAL PLASTIC TOILET SEAT

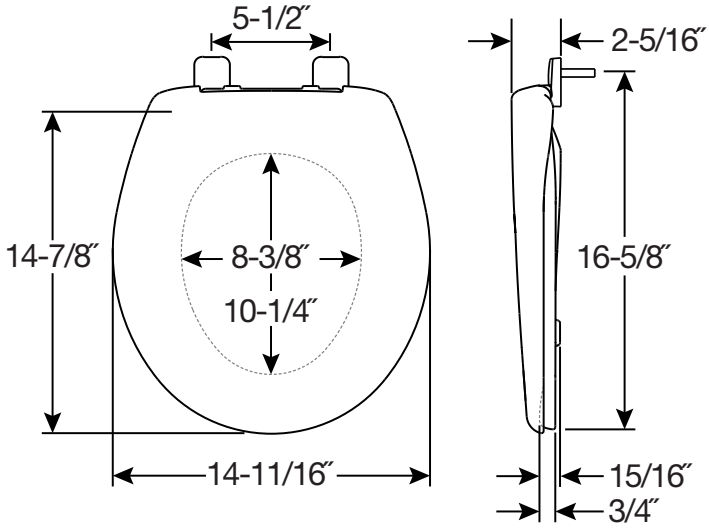

FEATURES:

- **Top-Tite® Hinges**
  Seat installs easily from above the bowl

SPECIFICATIONS:

Size: Round

Material: Plastic

Style: Closed Front with Cover

Ring Bumpers: Four

Hinges: Plastic

Hardware: Non-Corroding Hex-Tite™ Bolts and Wing Nuts

Codes & Standards: Complies with IAPMO/ANSI Z124.5 Performance Standards Residential

Proudly Made in the USA

Eco-Friendly

Bemis Manufacturing Co., Sheboygan Falls, WI 53085 | ToiletSeats.com | ph: 800.558.7651 | fx: 800.292.3647

Bemis Manufacturing Co. reserves the right to make revisions without notice to product specifications.

©2018 0B7012446

1100EC

RESIDENTIAL PLASTIC TOILET SEAT

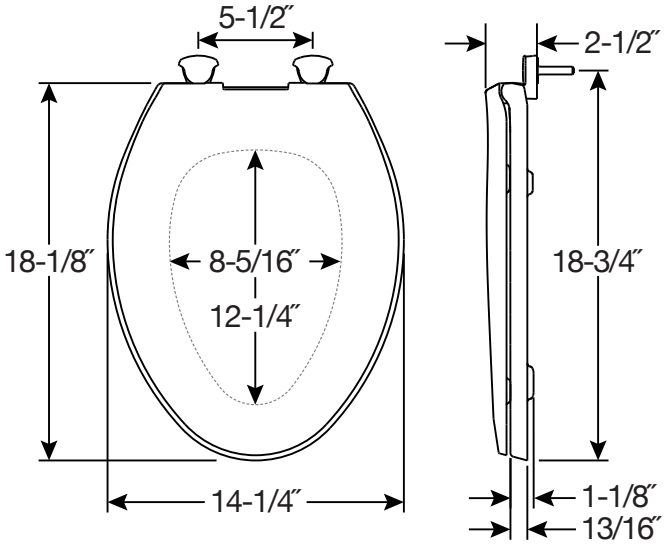

FEATURES:

- **Easy•Clean & Change®**
  Removes for easy cleaning

SPECIFICATIONS:

Size: Elongated

Material: Plastic

Style: Closed Front with Cover

Ring Bumpers: Four

Hinges: Plastic

Hardware: Non-Corroding Bolts and Wing Nuts

Codes & Standards: Complies with IAPMO/ANSI Z124.5 Performance Standards Residential

Proudly Made in the USA

Eco-Friendly

Bemis Manufacturing Co., Sheboygan Falls, WI 53085 | ToiletSeats.com | ph: 800.558.7651 | fx: 800.292.3647

Bemis Manufacturing Co. reserves the right to make revisions without notice to product specifications.

©2018 0B7012442

100EC

RESIDENTIAL PLASTIC TOILET SEAT

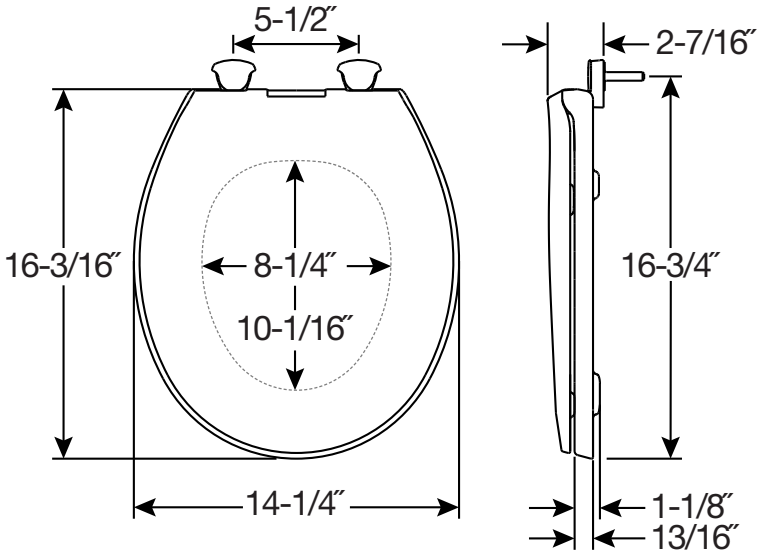

FEATURES:

- **Easy•Clean & Change®**
  Removes for easy cleaning

SPECIFICATIONS:

Size: Round

Material: Plastic

Style: Closed Front with Cover

Ring Bumpers: Four

Hinges: Plastic

Hardware: Non-Corroding Bolts and Wing Nuts

Codes & Standards: Complies with IAPMO/ANSI Z124.5 Performance Standards Residential

Proudly Made in the USA

Eco-Friendly

Bemis Manufacturing Co., Sheboygan Falls, WI 53085 | ToiletSeats.com | ph: 800.558.7651 | fx: 800.292.3647

Bemis Manufacturing Co. reserves the right to make revisions without notice to product specifications.

©2018 0B7012442

7300SLEC

RESIDENTIAL PLASTIC TOILET SEAT

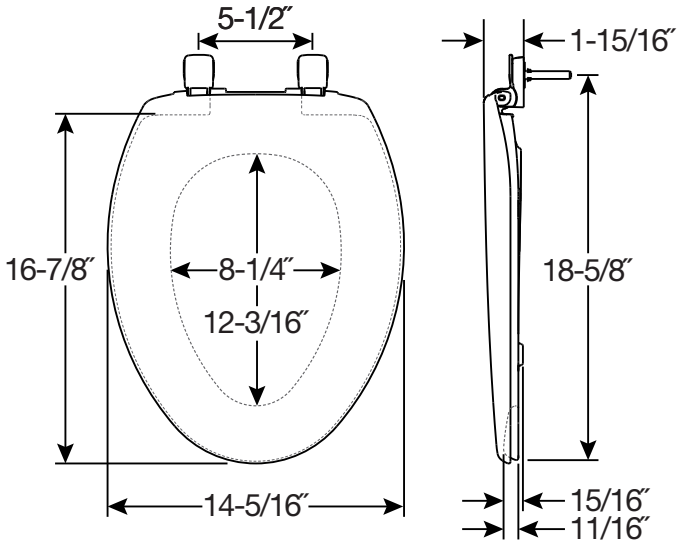

FEATURES:

- **Easy•Clean & Change®**
  Removes for easy cleaning
- **Whisper•Close®**
  Slowly and quietly closes

SPECIFICATIONS:

Size: Elongated

Material: Plastic

Style: Closed Front with Cover

Ring Bumpers: Four

Hinges: Plastic

Hardware: Non-Corroding Bolts and Wing Nuts

Codes & Standards: Complies with IAPMO/ANSI Z124.5 Standards Residential Classification

Proudly Made in the USA

Eco-Friendly

Bemis Manufacturing Co., Sheboygan Falls, WI 53085 | ToiletSeats.com | ph: 800.558.7651 | fx: 800.292.3647

Bemis Manufacturing Co. reserves the right to make revisions without notice to product specifications.

©2018 0B7012477

730SLEC

RESIDENTIAL PLASTIC TOILET SEAT

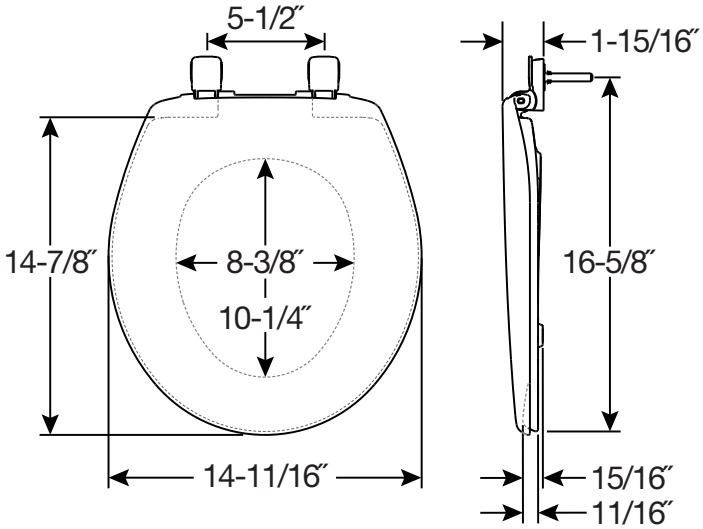

FEATURES:

- **Easy•Clean & Change®**
  Removes for easy cleaning
- **Whisper•Close®**
  Slowly and quietly closes

SPECIFICATIONS:

Size: Round

Material: Plastic

Style: Closed Front with Cover

Ring Bumpers: Four

Hinges: Plastic

Hardware: Non-Corroding Bolts and Wing Nuts

Codes & Standards: Complies with IAPMO/ANSI Z124.5 Standards Residential Classification

Proudly Made in the USA

Eco-Friendly

Bemis Manufacturing Co., Sheboygan Falls, WI 53085 | ToiletSeats.com | ph: 800.558.7651 | fx: 800.292.3647

Bemis Manufacturing Co. reserves the right to make revisions without notice to product specifications.

©2018 0B7012477

1800EC

RESIDENTIAL PLASTIC TOILET SEAT

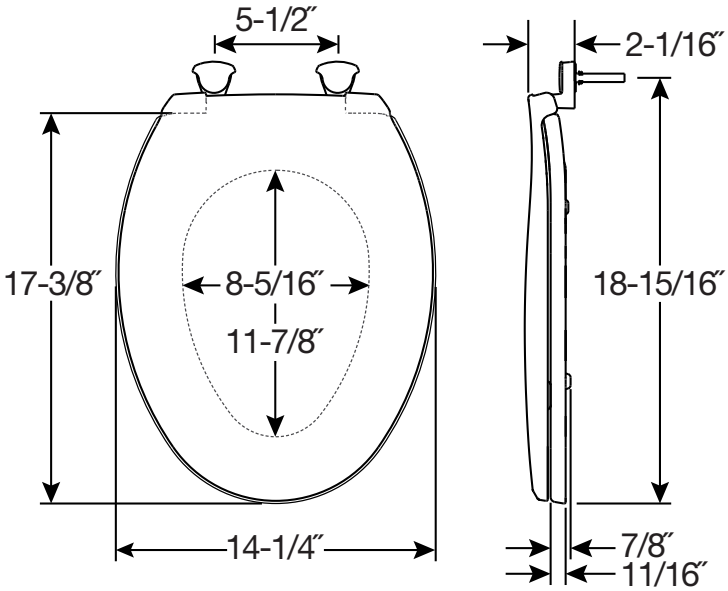

FEATURES:

- **Easy•Clean & Change®**
  Removes for easy cleaning

SPECIFICATIONS:

Size: Elongated

Material: Plastic

Style: Closed Front with Cover

Ring Bumpers: Four

Hinges: Plastic

Hardware: Non-Corroding Bolts and Wing Nuts

Codes & Standards: Complies with IAPMO/ANSI Z124.5 Performance Standards Residential

Proudly Made in the USA

Eco-Friendly

Bemis Manufacturing Co., Sheboygan Falls, WI 53085 | ToiletSeats.com | ph: 800.558.7651 | fx: 800.292.3647

Bemis Manufacturing Co. reserves the right to make revisions without notice to product specifications.

©2018 0B7012488

800EC

RESIDENTIAL PLASTIC TOILET SEAT

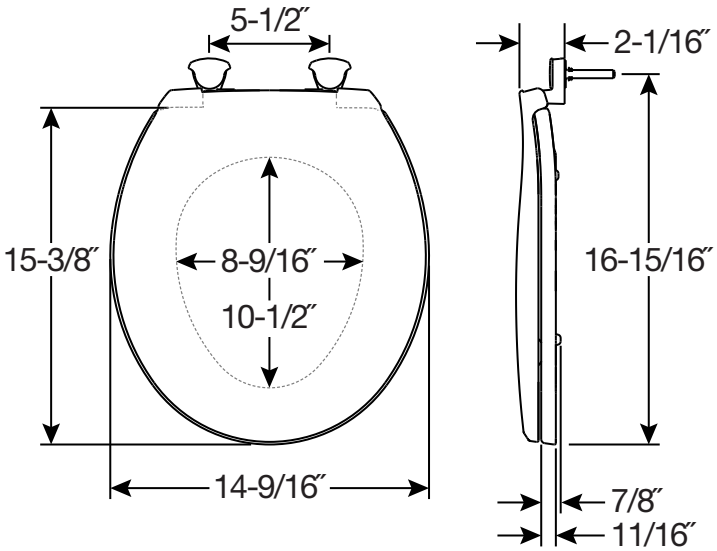

FEATURES:

- **Easy•Clean & Change®**
  Removes for easy cleaning

SPECIFICATIONS:

Size: Round

Material: Plastic

Style: Closed Front with Cover

Ring Bumpers: Four

Hinges: Plastic

Hardware: Non-Corroding Bolts and Wing Nuts

Codes & Standards: Complies with IAPMO/ANSI Z124.5 Performance Standards Residential

Proudly Made in the USA

Eco-Friendly

Bemis Manufacturing Co., Sheboygan Falls, WI 53085 | ToiletSeats.com | ph: 800.558.7651 | fx: 800.292.3647

Bemis Manufacturing Co. reserves the right to make revisions without notice to product specifications.

©2018 0B7012488

170

RESIDENTIAL PLASTIC TOILET SEAT

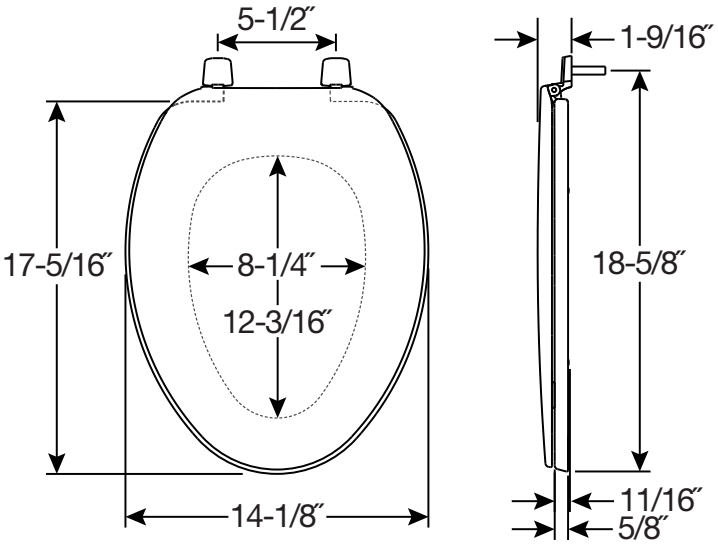

FEATURES:

- **Top-Tite® Hinges**
  Seat installs easily from above the bowl

SPECIFICATIONS:

Size: Elongated

Material: Plastic

Style: Closed Front with Cover

Ring Bumpers: Four

Hinges: Plastic

Hardware: Non-Corroding Hex-Tite™ Bolts and Wing Nuts

Codes & Standards: Complies with IAPMO/ANSI Z124.5 Performance Standards Residential

Proudly Made in the USA

Eco-Friendly

Bemis Manufacturing Co., Sheboygan Falls, WI 53085 | ToiletSeats.com | ph: 800.558.7651 | fx: 800.292.3647

Bemis Manufacturing Co. reserves the right to make revisions without notice to product specifications.

©2018 0B7012436

RESIDENTIAL PLASTIC TOILET SEAT

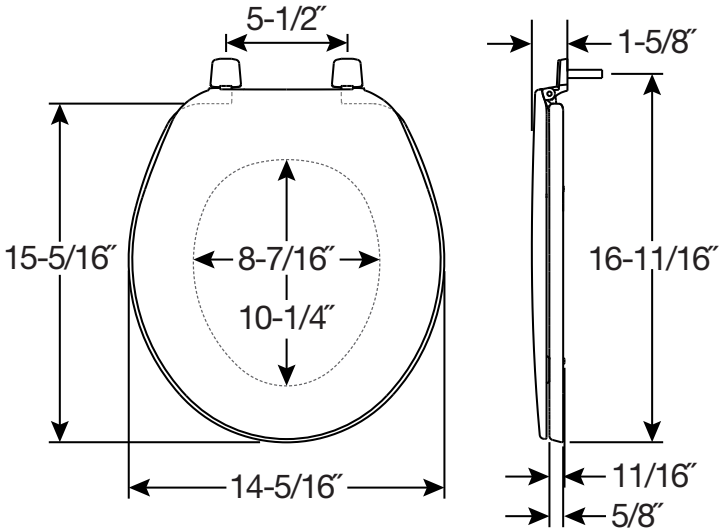

FEATURES:

- **Top-Tite® Hinges**
  Seat installs easily from above the bowl

SPECIFICATIONS:

Size: Round

Material: Plastic

Style: Closed Front with Cover

Ring Bumpers: Four

Hinges: Plastic

Hardware: Non-Corroding Hex-Tite™ Bolts and Wing Nuts

Codes & Standards: Complies with IAPMO/ANSI Z124.5 Performance Standards Residential

Proudly Made in the USA

Eco-Friendly

Bemis Manufacturing Co., Sheboygan Falls, WI 53085 | ToiletSeats.com | ph: 800.558.7651 | fx: 800.292.3647

Bemis Manufacturing Co. reserves the right to make revisions without notice to product specifications.
©2018 0B7012436

LC212

RESIDENTIAL PLASTIC TOILET SEAT

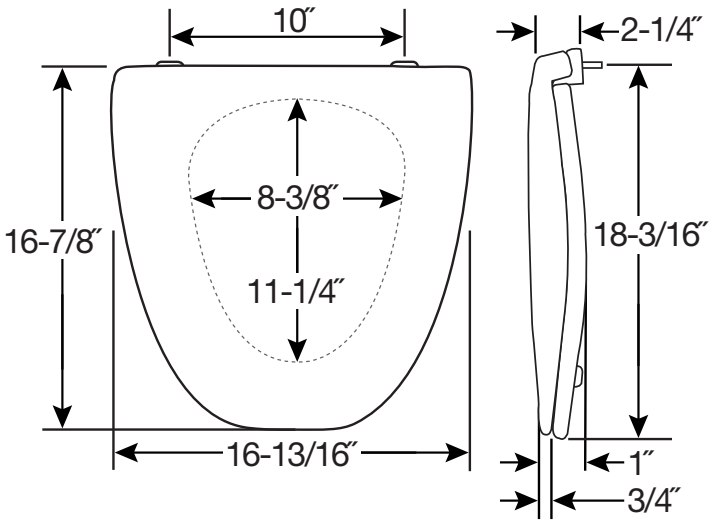

FEATURES:

- **10″ Bolt Spread**
  Fits American Standard® bowls

SPECIFICATIONS:

Size: Elongated

Material: Plastic

Style: Closed Front with Cover

Ring Bumpers: Four

Hinges: Plastic with 300 Series Stainless Steel Posts and Pintles

Hardware: Non-Corroding 300 Series Stainless Steel Nuts

Fits: American Standard® Bowls

Codes & Standards: Complies with IAPMO/ANSI Z124.5 Standards Residential Classification

Proudly Made in the USA

Eco-Friendly

Bemis Manufacturing Co., Sheboygan Falls, WI 53085 | ToiletSeats.com | ph: 800.558.7651 | fx: 800.292.3647

Bemis Manufacturing Co. reserves the right to make revisions without notice to product specifications.

©2018 0B7012455

EL270

RESIDENTIAL PLASTIC TOILET SEAT

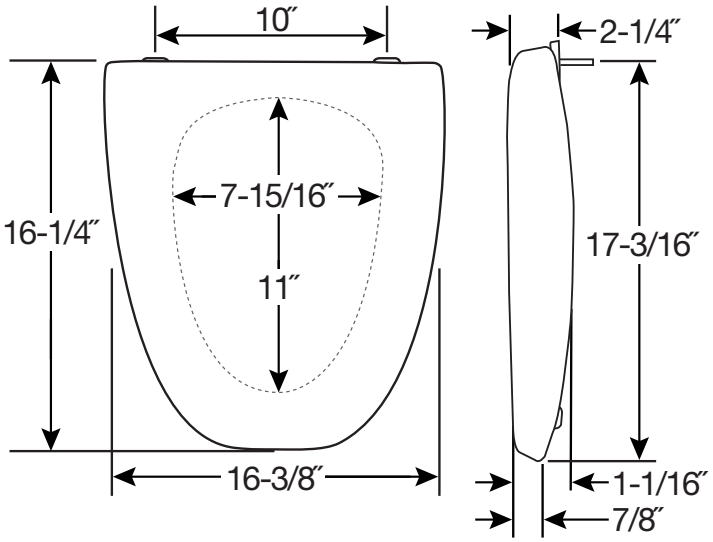

FEATURES:

- **10″ Bolt Spread**
  Fits American Standard® bowls

SPECIFICATIONS:

Size: Elongated

Material: Plastic

Style: Closed Front with Cover

Ring Bumpers: Four

Hinges: Plastic with 300 Series Stainless Steel Posts and Pintles

Hardware: Non-Corroding 300 Series Stainless Steel Nuts

Fits: American Standard® Bowls

Codes & Standards: Complies with IAPMO/ANSI Z124.5 Standards Residential Classification

Proudly Made in the USA

Eco-Friendly

Bemis Manufacturing Co., Sheboygan Falls, WI 53085 | ToiletSeats.com | ph: 800.558.7651 | fx: 800.292.3647

Bemis Manufacturing Co. reserves the right to make revisions without notice to product specifications.

©2018 0B7012455

1240205

RESIDENTIAL PLASTIC TOILET SEAT

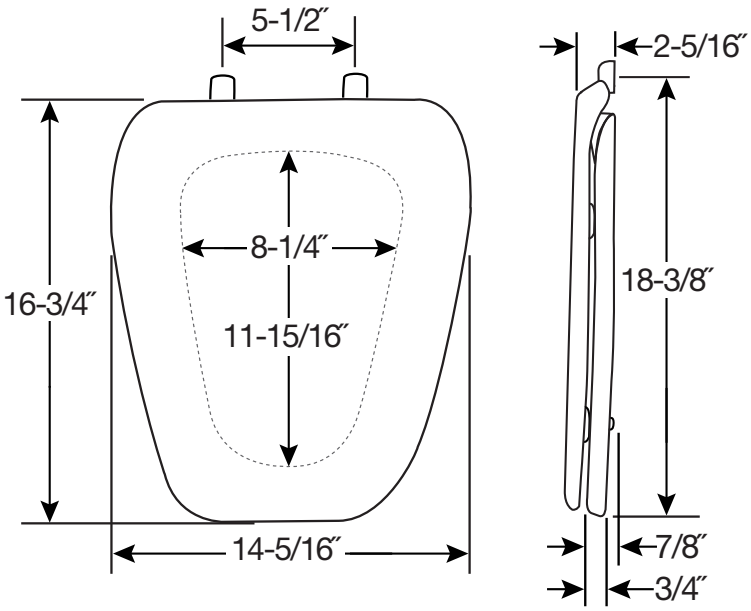

FEATURES:

- **Top-Tite® Hinges**
  Seat installs easily from above the bowl

SPECIFICATIONS:

Size: Elongated

Material: Plastic

Style: Closed Front with Cover

Ring Bumpers: Four

Hinges: Plastic

Hardware: Non-Corroding Bolts and Wing Nuts

Fits: Eljer® Emblem Bowls

Codes & Standards: Complies with IAPMO/ANSI Z124.5 Standards Residential Classification

Proudly Made in the USA

Eco-Friendly

Bemis Manufacturing Co., Sheboygan Falls, WI 53085 | ToiletSeats.com | ph: 800.558.7651 | fx: 800.292.3647

Bemis Manufacturing Co. reserves the right to make revisions without notice to product specifications.

©2018 0B7012464

1240200

RESIDENTIAL PLASTIC TOILET SEAT

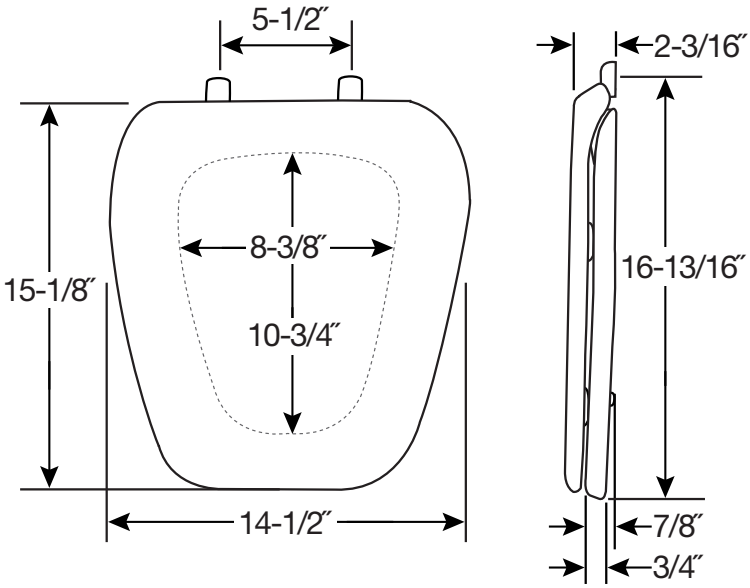

FEATURES:

- **Top-Tite® Hinges**
  Seat installs easily from above the bowl

SPECIFICATIONS:

Size: Round

Material: Plastic

Style: Closed Front with Cover

Ring Bumpers: Four

Hinges: Plastic

Hardware: Non-Corroding Bolts and Wing Nuts

Fits: Eljer® Emblem Bowls

Codes & Standards: Complies with IAPMO/ANSI Z124.5 Standards Residential Classification

Proudly Made in the USA

Eco-Friendly

Bemis Manufacturing Co., Sheboygan Falls, WI 53085 | ToiletSeats.com | ph: 800.558.7651 | fx: 800.292.3647

Bemis Manufacturing Co. reserves the right to make revisions without notice to product specifications.

©2018 0B7012464

BEMIS®

COMMERCIAL PLASTIC

1955CT / 1955SSCT

COMMERCIAL HEAVY-DUTY
PLASTIC TOILET SEAT

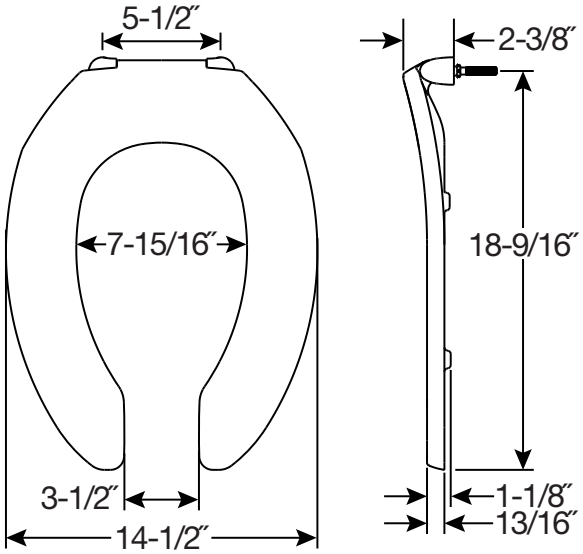

FEATURES:

- **STA-TITE®**
  Commercial Fastening System™
  Eliminates callbacks for loosened seats

SPECIFICATIONS:

Size: Elongated

Material: Plastic

Style: Open Front less Cover

Ring Bumpers: Four

Hinges: Plastic Non Self-Sustaining Check Hinges (1955CT) or Self-Sustaining Check Hinges (1955SSCT) with Non-Corroding 300 Series Stainless Steel Posts and Pintles

Hardware: STA-TITE® Commercial Fastening System™

Codes & Standards: Complies with IAPMO/ANSI Z124.5 Performance Standards Heavy-Duty Commercial

Proudly Made in the USA

Eco-Friendly

Bemis Manufacturing Co., Sheboygan Falls, WI 53085 | ToiletSeats.com | ph: 800.558.7651 | fx: 800.292.3647

Bemis Manufacturing Co. reserves the right to make revisions without notice to product specifications.
©2018 0B7012484

955CT / 955SSCT

COMMERCIAL HEAVY-DUTY
PLASTIC TOILET SEAT

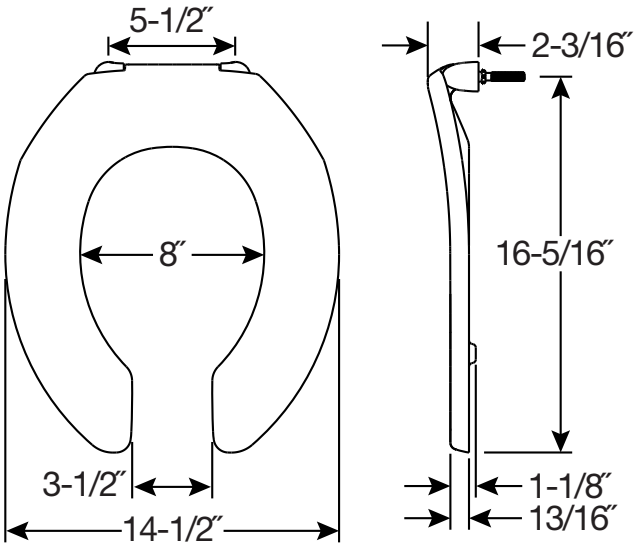

FEATURES:

- **STA-TITE®**
  Commercial Fastening System™
  Eliminates callbacks for loosened seats

SPECIFICATIONS:

Size: Round

Material: Plastic

Style: Open Front less Cover

Ring Bumpers: Two

Hinges: Plastic Non Self-Sustaining Check Hinges (955CT) or Self-Sustaining Check Hinges (955SSCT) with Non-Corroding 300 Series Stainless Steel Posts and Pintles

Hardware: STA-TITE® Commercial Fastening System™

Codes & Standards: Complies with IAPMO/ANSI Z124.5 Performance Standards Heavy-Duty Commercial

Proudly Made in the USA

Eco-Friendly

Bemis Manufacturing Co., Sheboygan Falls, WI 53085 | ToiletSeats.com | ph: 800.558.7651 | fx: 800.292.3647

Bemis Manufacturing Co. reserves the right to make revisions without notice to product specifications.
©2018 0B7012484

1955CTFR / 1955SSTFR

COMMERCIAL HEAVY-DUTY
PLASTIC TOILET SEAT

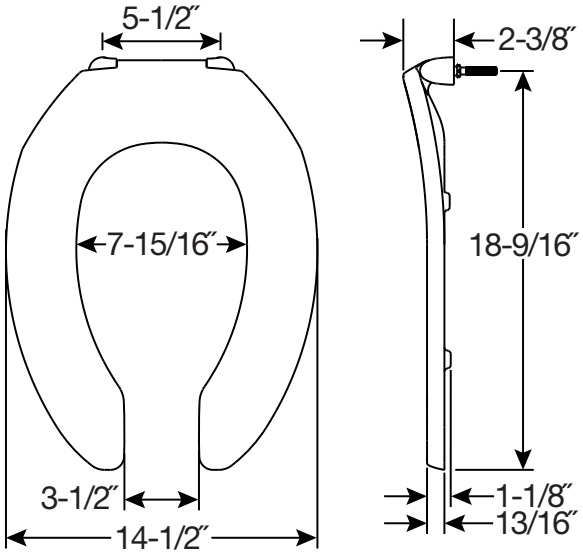

FEATURES:

- **STA-TITE®**
  Commercial Fastening System™
  Eliminates callbacks for loosened seats
- **FirePro™**
  Manufactured with fire-retardant additive
- **DuraGuard® Antimicrobial ***
  Built-In Seat Protection™

** DuraGuard Antimicrobial does not protect users against bacteria, viruses, or other disease organisms. Always clean and wash this product thoroughly before and after each use.*

SPECIFICATIONS:

Size: Elongated

Material: Plastic

Style: Open Front less Cover

Ring Bumpers: Four

Hinges: Plastic Non Self-Sustaining Check Hinges (1955CTFR) or Self-Sustaining Check Hinges (1955SSTFR) with Non-Corroding 300 Series Stainless Steel Posts and Pintles

Hardware: STA-TITE® Commercial Fastening System™

Codes & Standards: Complies with IAPMO/ANSI Z124.5 Performance Standards Heavy-Duty Commercial

Meets the UL-94 VO flammability rating

Proudly Made in the USA

Eco-Friendly

Bemis Manufacturing Co., Sheboygan Falls, WI 53085 | ToiletSeats.com | ph: 800.558.7651 | fx: 800.292.3647

Bemis Manufacturing Co. reserves the right to make revisions without notice to product specifications.
©2018 0B7012483

1955CTJ

COMMERCIAL HEAVY-DUTY
PLASTIC TOILET SEAT

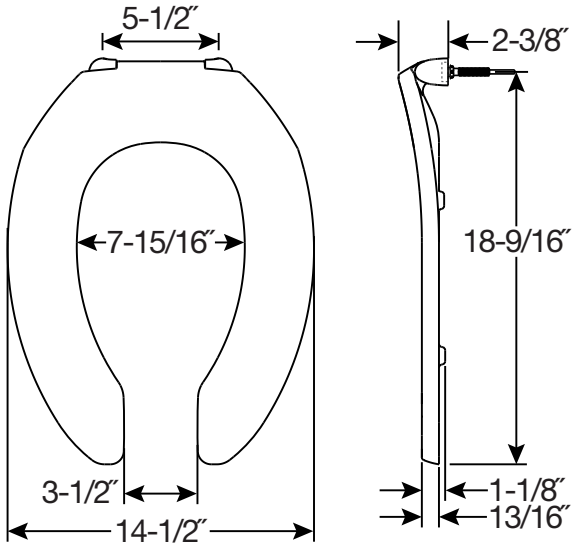

FEATURES:

- **STA-TITE®**
  Commercial Fastening System™
  Eliminates callbacks for loosened seats
- **JUST•LIFT®**
  Provides 1-½″ lift height for enhanced cleanability

SPECIFICATIONS:

Size: Elongated

Material: Plastic

Style: Open Front less Cover

Ring Bumpers: Four

Hinges: Plastic Just•Lift® Check Hinges with Non-Corroding 300 Series Stainless Steel Posts and Pintles

Hardware: STA-TITE® Commercial Fastening System™

Codes & Standards: Complies with IAPMO/ANSI Z124.5 Performance Standards Heavy-Duty Commercial

Proudly Made in the USA

Eco-Friendly

Bemis Manufacturing Co., Sheboygan Falls, WI 53085 | ToiletSeats.com | ph: 800.558.7651 | fx: 800.292.3647

Bemis Manufacturing Co. reserves the right to make revisions without notice to product specifications.
©2018 0B7012482

1055 / 1055SSC

COMMERCIAL HEAVY-DUTY
PLASTIC TOILET SEAT

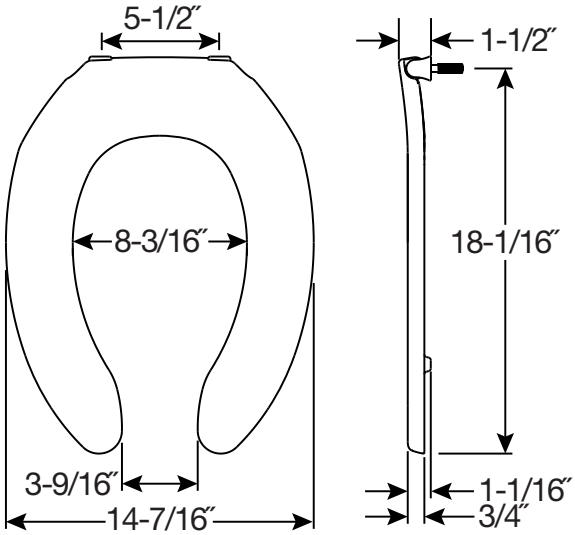

SPECIFICATIONS:

Size: Elongated

Material: Plastic

Style: Open Front less Cover

Ring Bumpers: Two

Hinges: Plastic Non Self-Sustaining Check Hinge (1055) or Self-Sustaining Check Hinge (1055SSC) with Non-Corroding 300 Series Stainless Steel Posts and Pintles

Hardware: Non-Corroding 300 Series Stainless Steel Washers and Nuts

Codes & Standards: Complies with IAPMO/ANSI Z124.5 Performance Standards Heavy-Duty Commercial

Proudly Made in the USA

Eco-Friendly

Bemis Manufacturing Co., Sheboygan Falls, WI 53085 | ToiletSeats.com | ph: 800.558.7651 | fx: 800.292.3647

Bemis Manufacturing Co. reserves the right to make revisions without notice to product specifications.
©2018 0B7012441

1655CT / 1655SSCT

COMMERCIAL EXTRA HEAVY-DUTY
PLASTIC TOILET SEAT

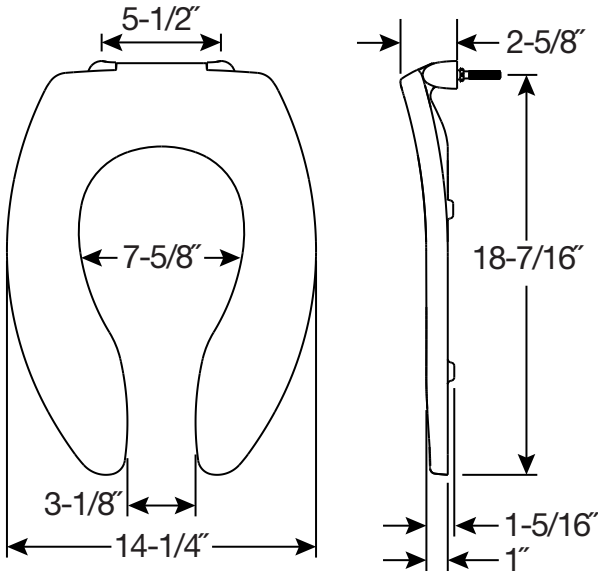

FEATURES:

- **STA-TITE®**
  Commercial Fastening System™
  Eliminates callbacks for loosened seats

SPECIFICATIONS:

Size: Elongated

Material: Plastic

Style: Open Front less Cover

Ring Bumpers: Four

Hinges: Plastic Non Self-Sustaining Check Hinges (1655CT) or Self-Sustaining Check Hinges (1655SSCT) with Non-Corroding 300 Series Stainless Steel Posts and Pintles

Hardware: STA-TITE® Commercial Fastening System™

Codes & Standards: Complies with IAPMO/ANSI Z124.5 Performance Standards Heavy-Duty Commercial

Proudly Made in the USA

Eco-Friendly

Bemis Manufacturing Co., Sheboygan Falls, WI 53085 | ToiletSeats.com | ph: 800.558.7651 | fx: 800.292.3647

Bemis Manufacturing Co. reserves the right to make revisions without notice to product specifications.
©2018 0B7012489

9400CT / 9400SSCT

COMMERCIAL EXTRA HEAVY-DUTY
PLASTIC TOILET SEAT

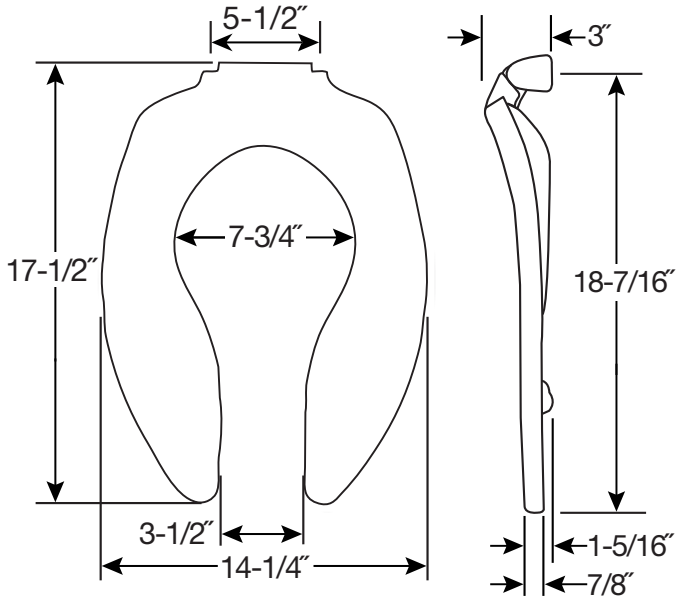

FEATURES:

- **STA-TITE®**
  Commercial Fastening System™
  Eliminates callbacks for loosened seats

SPECIFICATIONS:

Size: Elongated

Material: Plastic

Style: Open Front less Cover

Ring Bumpers: Two

Hinges: Plastic Non Self-Sustaining Check Hinges (9400CT) or Self-Sustaining Check Hinges (9400SSCT) with Non-Corroding 300 Series Stainless Steel Posts and Pintles

Hardware: STA-TITE® Commercial Fastening System™

Codes & Standards: Complies with IAPMO/ANSI Z124.5 Performance Standards Heavy-Duty Commercial

Proudly Made in the USA

Eco-Friendly

Bemis Manufacturing Co., Sheboygan Falls, WI 53085 | ToiletSeats.com | ph: 800.558.7651 | fx: 800.292.3647

Bemis Manufacturing Co. reserves the right to make revisions without notice to product specifications.
©2018 0B7012467

1250TTA

COMMERCIAL HEAVY-DUTY
PLASTIC TOILET SEAT

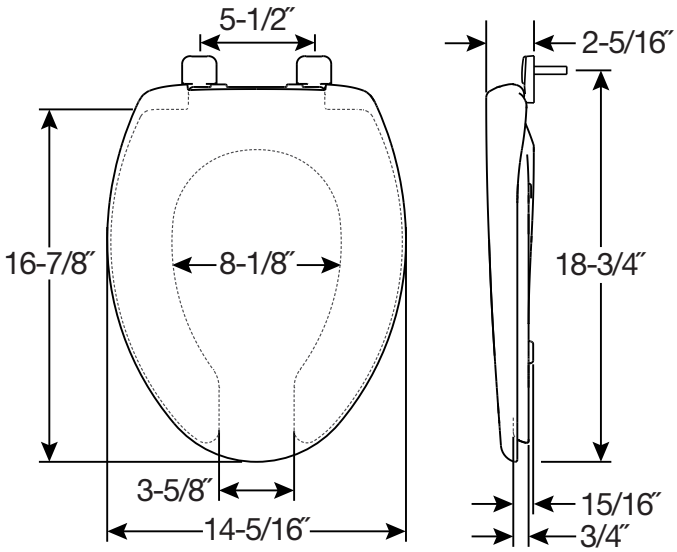

FEATURES:

- **Top-Tite® Hinges**
  Seat installs easily from above the bowl

SPECIFICATIONS:

Size: Elongated

Material: Plastic

Style: Open Front with Cover

Ring Bumpers: Four

Hinges: Plastic

Hardware: Non-Corroding Hex-Tite™ Bolts and Wing Nuts

Codes & Standards: Complies with IAPMO/ANSI Z124.5 Performance Standards Heavy-Duty Commercial

Proudly Made in the USA

Eco-Friendly

Bemis Manufacturing Co., Sheboygan Falls, WI 53085 | ToiletSeats.com | ph: 800.558.7651 | fx: 800.292.3647

Bemis Manufacturing Co. reserves the right to make revisions without notice to product specifications.
©2018 0B7012447

175

COMMERCIAL PLASTIC TOILET SEAT

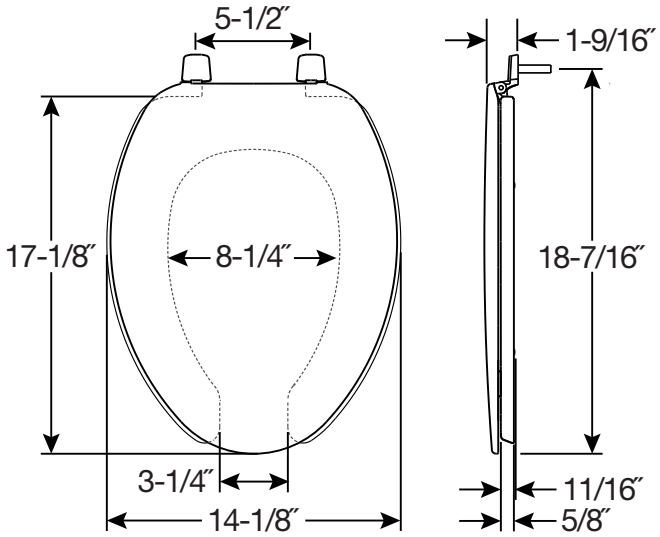

FEATURES:

- **Top-Tite® Hinges**
  Seat installs easily from above the bowl

SPECIFICATIONS:

Size: Elongated

Material: Plastic

Style: Open Front with Cover

Ring Bumpers: Four

Hinges: Plastic

Hardware: Non-Corroding Hex-Tite™ Bolts and Wing Nuts

Codes & Standards: Complies with IAPMO/ANSI Z124.5 Performance Standards Heavy-Duty Commercial

Eco-Friendly

Bemis Manufacturing Co. reserves the right to make revisions without notice to product specifications.
©2018 0B7012437

COMMERCIAL PLASTIC TOILET SEAT

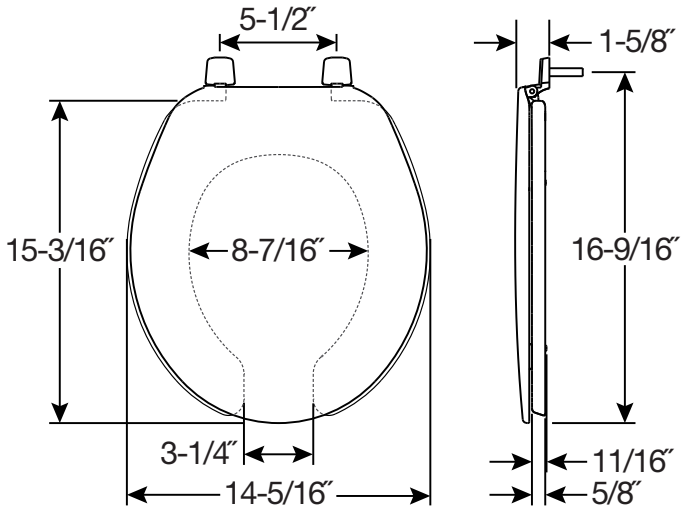

FEATURES:

- **Top-Tite® Hinges**
  Seat installs easily from above the bowl

SPECIFICATIONS:

Size: Round

Material: Plastic

Style: Open Front with Cover

Ring Bumpers: Four

Hinges: Plastic

Hardware: Non-Corroding Hex-Tite™ Bolts and Wing Nuts

Codes & Standards: Complies with IAPMO/ANSI Z124.5 Performance Standards Heavy-Duty Commercial

Eco-Friendly

Bemis Manufacturing Co. reserves the right to make revisions without notice to product specifications.
©2018 0B7012437

1900 / 1900SS

COMMERCIAL HEAVY-DUTY
PLASTIC TOILET SEAT

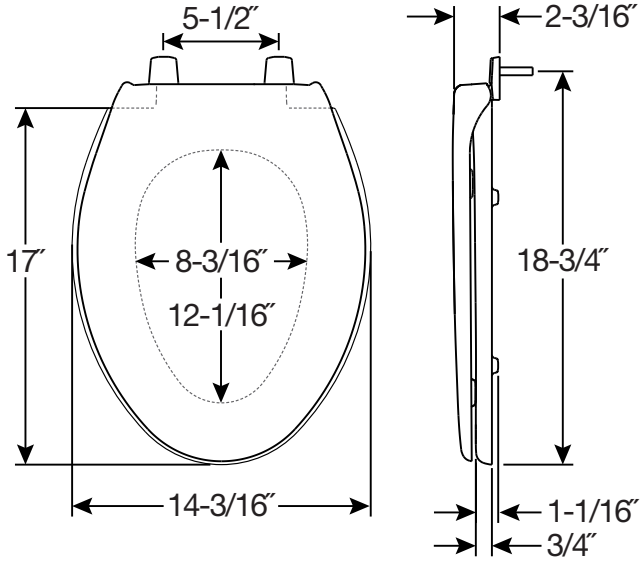

FEATURES:

- **Top-Tite® Hinges (1900)**
  Seat installs easily from above the bowl
- **Stainless Steel Hinges (1900SS)**
  Self-sustaining hinges prevent seat from slamming

SPECIFICATIONS:

Size: Elongated

Material: Plastic

Style: Closed Front with Cover

Ring Bumpers: Four

Hinges: Plastic (1900) or 300 Series Stainless Steel Self-Sustaining (1900SS)

Hardware: Non-Corroding Hex-Tite™ Bolts and Wing Nuts (1900) or 300 Series Stainless Steel Washers and Nuts (1900SS)

Codes & Standards: Complies with IAPMO/ANSI Z124.5 Performance Standards Heavy-Duty Commercial

Proudly Made in the USA

Eco-Friendly

Bemis Manufacturing Co., Sheboygan Falls, WI 53085 | ToiletSeats.com | ph: 800.558.7651 | fx: 800.292.3647

Bemis Manufacturing Co. reserves the right to make revisions without notice to product specifications.
©2018 0B7012487

900

COMMERCIAL HEAVY-DUTY
PLASTIC TOILET SEAT

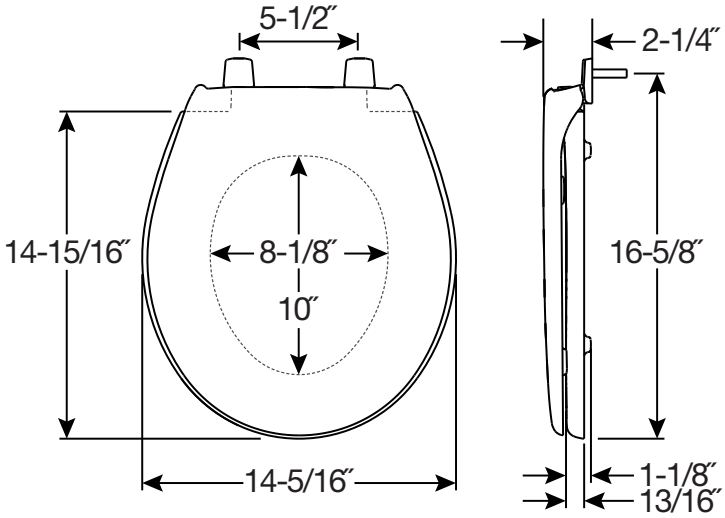

FEATURES:

- **Top-Tite® Hinges**
  Seat installs easily from above the bowl

SPECIFICATIONS:

Size: Round

Material: Plastic

Style: Closed Front with Cover

Ring Bumpers: Four

Hinges: Plastic

Hardware: Non-Corroding Hex-Tite™ Bolts and Wing Nuts

Codes & Standards: Complies with IAPMO/ANSI Z124.5 Performance Standards Heavy-Duty Commercial

Proudly Made in the USA

Eco-Friendly

Bemis Manufacturing Co., Sheboygan Falls, WI 53085 | ToiletSeats.com | ph: 800.558.7651 | fx: 800.292.3647

Bemis Manufacturing Co. reserves the right to make revisions without notice to product specifications.
©2018 0B7012487

1950 / 1950SS

COMMERCIAL HEAVY-DUTY
PLASTIC TOILET SEAT

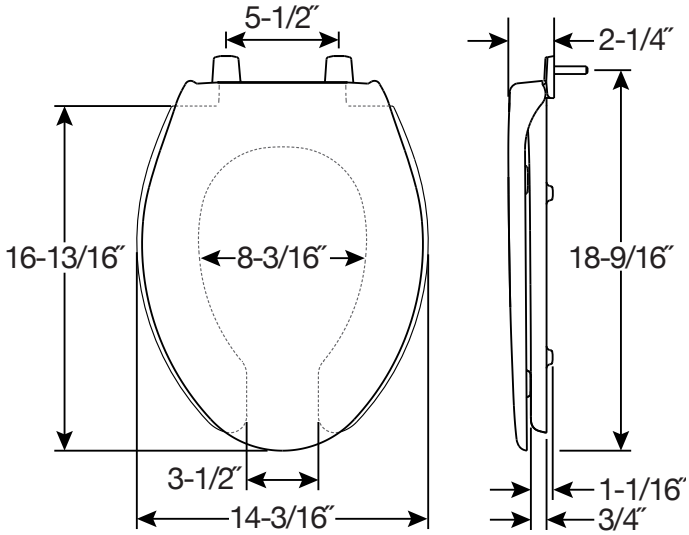

FEATURES:

- **Top-Tite® Hinges (1950)**
  Seat installs easily from above the bowl
- **Stainless Steel Hinges (1950SS)**
  Self-sustaining hinges prevent seat from slamming

SPECIFICATIONS:

Size: Elongated

Material: Plastic

Style: Open Front with Cover

Ring Bumpers: Four

Hinges: Plastic (1950) or 300 Series Stainless Steel Self-Sustaining (1950SS)

Hardware: Non-Corroding Hex-Tite™ Bolts and Wing Nuts (1950) or 300 Series Stainless Steel Hardware (1950SS)

Codes & Standards: Complies with IAPMO/ANSI Z124.5 Performance Standards Heavy-Duty Commercial

Proudly Made in the USA

Eco-Friendly

Bemis Manufacturing Co., Sheboygan Falls, WI 53085 | ToiletSeats.com | ph: 800.558.7651 | fx: 800.292.3647

Bemis Manufacturing Co. reserves the right to make revisions without notice to product specifications.
©2018 0B7012485

950

COMMERCIAL HEAVY-DUTY
PLASTIC TOILET SEAT

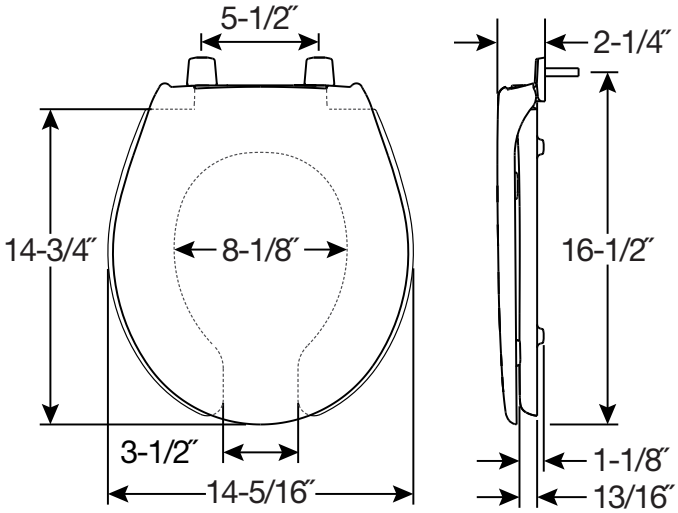

FEATURES:

- **Top-Tite® Hinges**
  Seat installs easily from above the bowl

SPECIFICATIONS:

Size: Round

Material: Plastic

Style: Open Front with Cover

Ring Bumpers: Four

Hinges: Plastic

Hardware: Non-Corroding Hex-Tite™ Bolts and Wing Nuts

Codes & Standards: Complies with IAPMO/ANSI Z124.5 Performance Standards Heavy-Duty Commercial

Proudly Made in the USA

Eco-Friendly

Bemis Manufacturing Co., Sheboygan Falls, WI 53085 | ToiletSeats.com | ph: 800.558.7651 | fx: 800.292.3647

Bemis Manufacturing Co. reserves the right to make revisions without notice to product specifications.
©2018 0B7012485

BB955CT

COMMERCIAL HEAVY-DUTY
PLASTIC TOILET SEAT

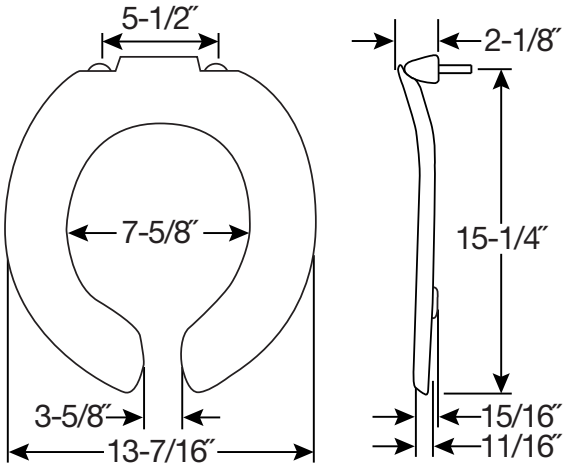

FEATURES:

- **STA-TITE®**
  Commercial Fastening System™
  Eliminates callbacks for loosened seats
- **DuraGuard® Antimicrobial ***
  Built-In Seat Protection™

** DuraGuard Antimicrobial does not protect users against bacteria, viruses, or other disease organisms. Always clean and wash this product thoroughly before and after each use.*

SPECIFICATIONS:

Size: Baby / Toddler

Material: Plastic

Style: Open Front less Cover

Ring Bumpers: Two

Hinges: Plastic with Non-Corroding 300 Series Stainless Steel Posts and Pintles

Hardware: STA-TITE® Commercial Fastening System™

Codes & Standards: Complies with IAPMO/ANSI Z124.5 Performance Standards Heavy-Duty Commercial

Proudly Made in the USA

Eco-Friendly

Bemis Manufacturing Co., Sheboygan Falls, WI 53085 | ToiletSeats.com | ph: 800.558.7651 | fx: 800.292.3647

Bemis Manufacturing Co. reserves the right to make revisions without notice to product specifications.
©2018 0B7012458

3155CT / 3155SSCT

COMMERCIAL EXTRA HEAVY-DUTY
PLASTIC TOILET SEAT

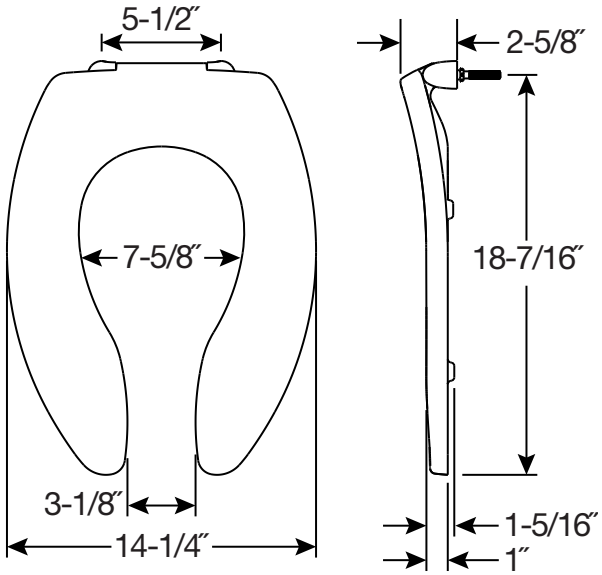

FEATURES:

- **STA-TITE®**
  Commercial Fastening System™
  Eliminates callbacks for loosened seats
- **DuraGuard® Antimicrobial ***
  Built-In Seat Protection™

** DuraGuard Antimicrobial does not protect users against bacteria, viruses, or other disease organisms. Always clean and wash this product thoroughly before and after each use.*

SPECIFICATIONS:

Size: Elongated

Material: Plastic

Style: Open Front less Cover

Ring Bumpers: Four

Hinges: Plastic Non Self-Sustaining Check Hinges (3155CT) or Self-Sustaining Check Hinges (3155SSCT) with Non-Corroding 300 Series Stainless Steel Posts and Pintles

Hardware: STA-TITE® Commercial Fastening System™

Codes & Standards: Complies with IAPMO/ANSI Z124.5 Performance Standards Heavy-Duty Commercial

Proudly Made in the USA

Eco-Friendly

Bemis Manufacturing Co., Sheboygan Falls, WI 53085 | ToiletSeats.com | ph: 800.558.7651 | fx: 800.292.3647

Bemis Manufacturing Co. reserves the right to make revisions without notice to product specifications.
©2018 0B7012479

2155CT / 2155SSCT

COMMERCIAL HEAVY-DUTY
PLASTIC TOILET SEAT

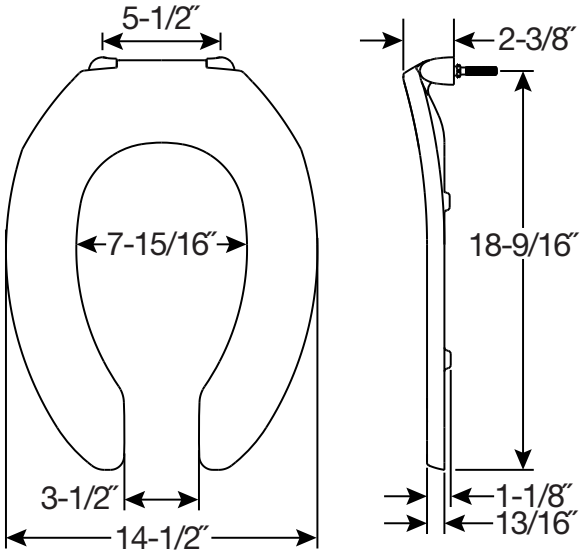

FEATURES:

- **STA-TITE®**
  Commercial Fastening System™
  Eliminates callbacks for loosened seats
- **DuraGuard® Antimicrobial ***
  Built-In Seat Protection™

** DuraGuard Antimicrobial does not protect users against bacteria, viruses, or other disease organisms. Always clean and wash this product thoroughly before and after each use.*

SPECIFICATIONS:

Size: Elongated

Material: Plastic

Style: Open Front less Cover

Ring Bumpers: Four

Hinges: Plastic Non Self-Sustaining Check Hinge (2155CT) or Self-Sustaining Check Hinge (2155SSCT) with Non-Corroding 300 Series Stainless Steel Posts and Pintles

Hardware: STA-TITE® Commercial Fastening System™

Codes & Standards: Complies with IAPMO/ANSI Z124.5 Performance Standards Heavy-Duty Commercial

Proudly Made in the USA

Eco-Friendly

Bemis Manufacturing Co., Sheboygan Falls, WI 53085 | ToiletSeats.com | ph: 800.558.7651 | fx: 800.292.3647

Bemis Manufacturing Co. reserves the right to make revisions without notice to product specifications.
©2018 0B7012481

2055CT / 2055SSCT

COMMERCIAL HEAVY-DUTY
PLASTIC TOILET SEAT

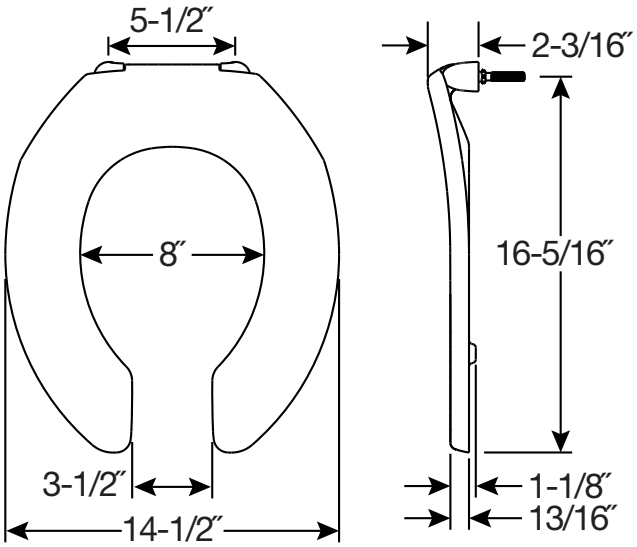

FEATURES:

- **STA-TITE®**
  Commercial Fastening System™
  Eliminates callbacks for loosened seats
- **DuraGuard® Antimicrobial ***
  Built-In Seat Protection™

** DuraGuard Antimicrobial does not protect users against bacteria, viruses, or other disease organisms. Always clean and wash this product thoroughly before and after each use.*

SPECIFICATIONS:

Size: Round

Material: Plastic

Style: Open Front less Cover

Ring Bumpers: Two

Hinges: Plastic Non Self-Sustaining Check Hinge (2055CT) or Self-Sustaining Check Hinge (2055SSCT) with Non-Corroding 300 Series Stainless Steel Posts and Pintles

Hardware: STA-TITE® Commercial Fastening System™

Codes & Standards: Complies with IAPMO/ANSI Z124.5 Performance Standards Heavy-Duty Commercial

Proudly Made in the USA

Eco-Friendly

Bemis Manufacturing Co., Sheboygan Falls, WI 53085 | ToiletSeats.com | ph: 800.558.7651 | fx: 800.292.3647

Bemis Manufacturing Co. reserves the right to make revisions without notice to product specifications.
©2018 0B7012481

2155CTJ

COMMERCIAL HEAVY-DUTY
PLASTIC TOILET SEAT

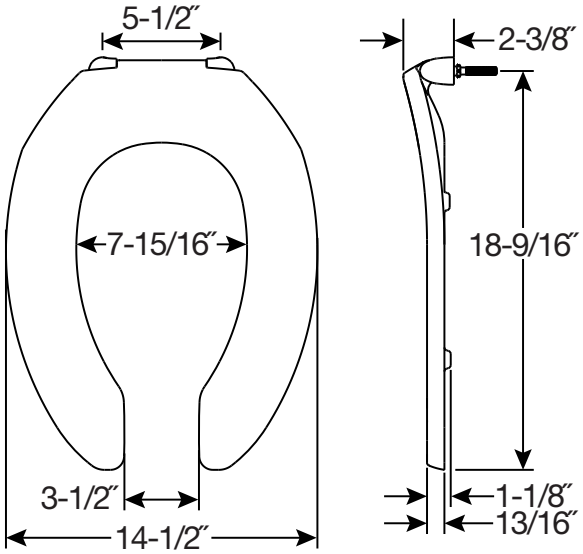

FEATURES:

- **STA-TITE®**
  Commercial Fastening System™
  Eliminates callbacks for loosened seats
- **JUST•LIFT®**
  Provides 1-½″ lift height for enhanced cleanability
- **DuraGuard® Antimicrobial ***
  Built-In Seat Protection™

** DuraGuard Antimicrobial does not protect users against bacteria, viruses, or other disease organisms. Always clean and wash this product thoroughly before and after each use.*

SPECIFICATIONS:

Size: Elongated

Material: Plastic

Style: Open Front less Cover

Ring Bumpers: Four

Hinges: Plastic Just•Lift® Check Hinges with Non-Corroding 300 Series Stainless Steel Posts and Pintles

Hardware: STA-TITE® Commercial Fastening System™

Codes & Standards: Complies with IAPMO/ANSI Z124.5 Performance Standards Heavy-Duty Commercial

Proudly Made in the USA

Eco-Friendly

Bemis Manufacturing Co., Sheboygan Falls, WI 53085 | ToiletSeats.com | ph: 800.558.7651 | fx: 800.292.3647

Bemis Manufacturing Co. reserves the right to make revisions without notice to product specifications.
©2018 0B7012480

95CT / 95SSCT

COMMERCIAL EXTRA HEAVY-DUTY
PLASTIC TOILET SEAT

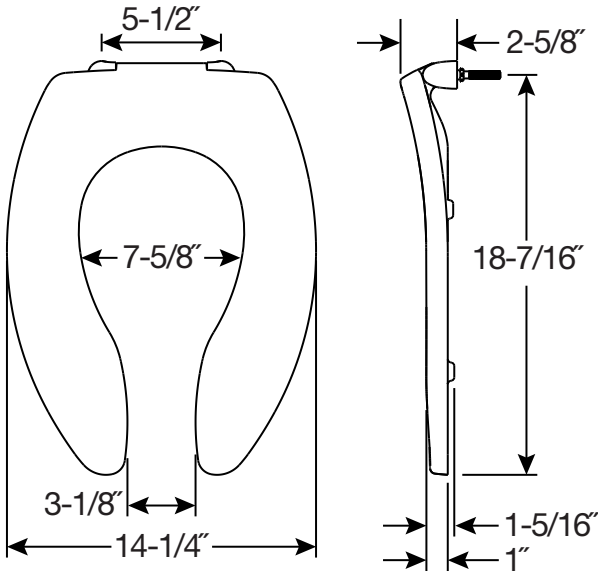

FEATURES:

- **STA-TITE®**
  Commercial Fastening System™
  Eliminates callbacks for loosened seats

SPECIFICATIONS:

Size: Elongated

Material: Plastic

Style: Open Front less Cover

Ring Bumpers: Four

Hinges: Plastic with Non Self-Sustaining Check Hinges (95CT) or Self-Sustaining Check Hinges (95SSCT) with Non-Corroding 300 Series Stainless Steel Posts and Pintles

Hardware: STA-TITE® Commercial Fastening System™

Codes & Standards: Complies with IAPMO/ANSI Z124.5 Performance Standards Heavy-Duty Commercial

Proudly Made in the USA

Eco-Friendly

Bemis Manufacturing Co., Sheboygan Falls, WI 53085 | ToiletSeats.com | ph: 800.558.7651 | fx: 800.292.3647

Bemis Manufacturing Co. reserves the right to make revisions without notice to product specifications.
©2018 0B7012434

10CT / 10SSCT

COMMERCIAL HEAVY-DUTY
PLASTIC TOILET SEAT

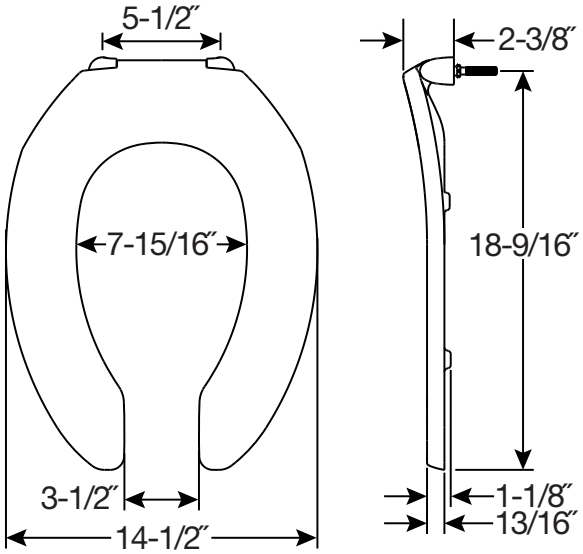

FEATURES:

- **STA-TITE®**
  Commercial Fastening System™
  Eliminates callbacks for loosened seats

SPECIFICATIONS:

Size: Elongated

Material: Plastic

Style: Open Front less Cover

Ring Bumpers: Four

Hinges: Plastic Non Self-Sustaining Check Hinges (10CT) or Plastic Self-Sustaining Check Hinges (10SSCT) with Non-Corroding 300 Series Stainless Steel Posts and Pintles

Hardware: STA-TITE® Commercial Fastening System™

Codes & Standards: Complies with IAPMO/ANSI Z124.5 Performance Standards Heavy-Duty Commercial

Proudly Made in the USA

Eco-Friendly

Bemis Manufacturing Co., Sheboygan Falls, WI 53085 | ToiletSeats.com | ph: 800.558.7651 | fx: 800.292.3647

Bemis Manufacturing Co. reserves the right to make revisions without notice to product specifications.
©2018 0B7012432

10SSCTFR

COMMERCIAL HEAVY-DUTY
PLASTIC TOILET SEAT

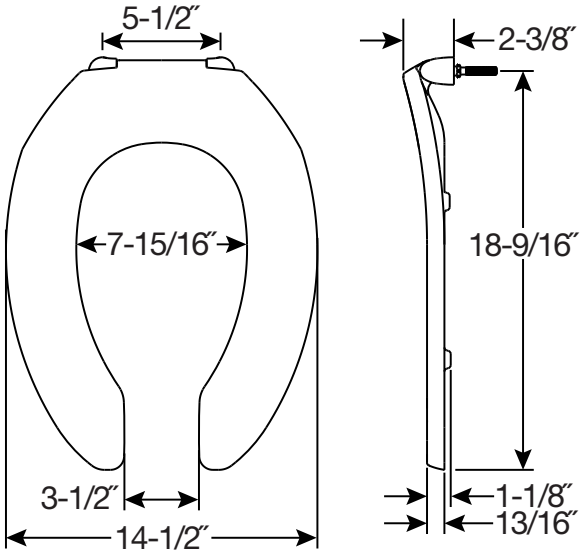

FEATURES:

- **STA-TITE®**
  Commercial Fastening System™
  Eliminates callbacks for loosened seats
- **FirePro™**
  Manufactured with fire-retardant additive
- **DuraGuard® Antimicrobial ***
  Built-In Seat Protection™

** DuraGuard Antimicrobial does not protect users against bacteria, viruses, or other disease organisms. Always clean and wash this product thoroughly before and after each use.*

SPECIFICATIONS:

Size: Elongated

Material: Plastic

Style: Open Front less Cover

Ring Bumpers: Four

Hinges: Plastic Self-Sustaining Check Hinges with Non-Corroding 300 Series Stainless Steel Posts and Pintles

Hardware: STA-TITE® Commercial Fastening System™

Codes & Standards: Complies with IAPMO/ANSI Z124.5 Performance Standards Heavy-Duty Commercial

Meets the UL-94 VO flammability rating

Proudly Made in the USA

Eco-Friendly

Bemis Manufacturing Co., Sheboygan Falls, WI 53085 | ToiletSeats.com | ph: 800.558.7651 | fx: 800.292.3647

Bemis Manufacturing Co. reserves the right to make revisions without notice to product specifications.
©2018 0B7012433

126CAMT

COMMERCIAL HEAVY-DUTY
PLASTIC TOILET SEAT

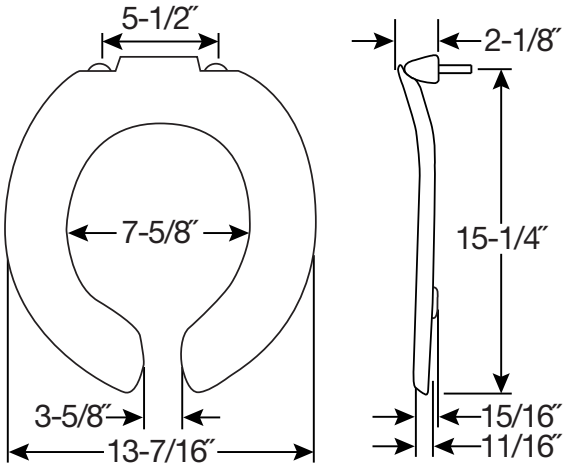

FEATURES:

- **STA-TITE®**
  Commercial Fastening System™
  Eliminates callbacks for loosened seats
- **DuraGuard® Antimicrobial ***
  Built-In Seat Protection™

** DuraGuard Antimicrobial does not protect users against bacteria, viruses, or other disease organisms. Always clean and wash this product thoroughly before and after each use.*

SPECIFICATIONS:

Size: Baby / Toddler

Material: Plastic

Style: Open Front less Cover

Ring Bumpers: Two

Hinges: Plastic with Non-Corroding 300 Series Stainless Steel Posts and Pintles

Hardware: STA-TITE® Commercial Fastening System™

Codes & Standards: Complies with IAPMO/ANSI Z124.5 Performance Standards Heavy-Duty Commercial

Proudly Made in the USA

Eco-Friendly

Bemis Manufacturing Co., Sheboygan Falls, WI 53085 | ToiletSeats.com | ph: 800.558.7651 | fx: 800.292.3647

Bemis Manufacturing Co. reserves the right to make revisions without notice to product specifications.
©2018 0B7012435

7300SL

HOSPITALITY PLASTIC TOILET SEAT

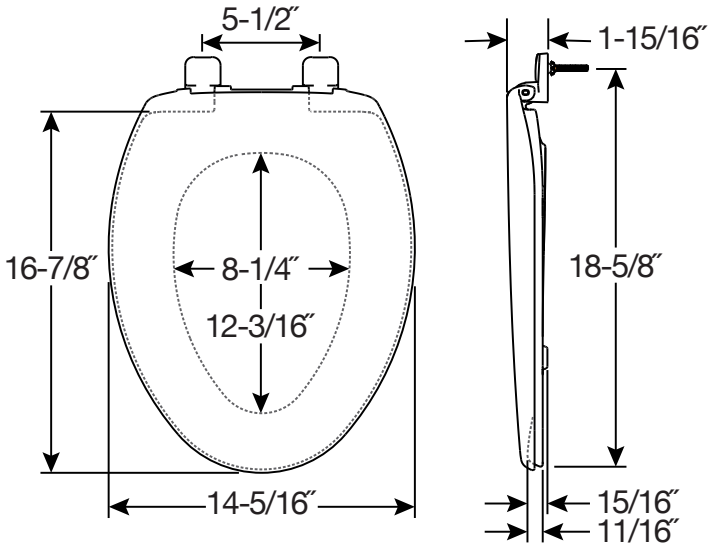

FEATURES:

- **STA-TITE®**
  Seat Fastening System™
  Never Loosens™
- **Whisper•Close®**
  Slowly and quietly closes

SPECIFICATIONS:

Size: Elongated

Material: Plastic

Style: Closed Front with Cover

Ring Bumpers: Four

Hinges: Plastic

Hardware: STA-TITE® Seat Fastening System™

Proudly Made in the USA

Eco-Friendly

Bemis Manufacturing Co., Sheboygan Falls, WI 53085 | ToiletSeats.com | ph: 800.558.7651 | fx: 800.292.3647

Bemis Manufacturing Co. reserves the right to make revisions without notice to product specifications.

©2018 0B7012478

730SL

HOSPITALITY PLASTIC TOILET SEAT

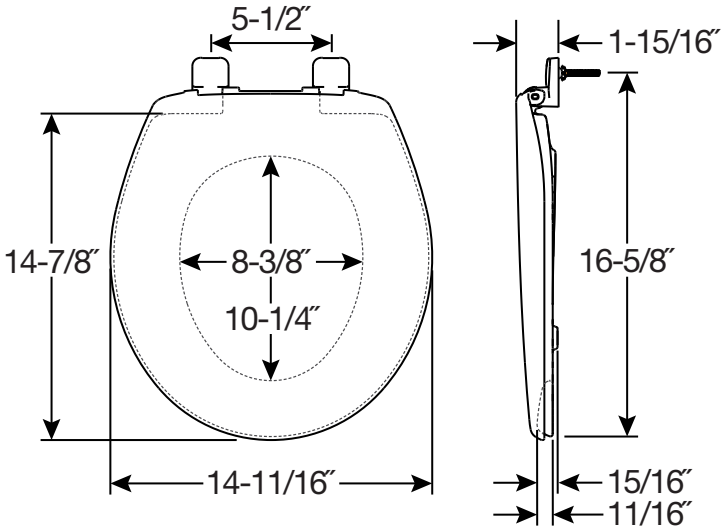

FEATURES:

- **STA-TITE®**
  Seat Fastening System™
  Never Loosens™
- **Whisper•Close®**
  Slowly and quietly closes

SPECIFICATIONS:

Size: Round

Material: Plastic

Style: Closed Front with Cover

Ring Bumpers: Four

Hinges: Plastic

Hardware: STA-TITE® Seat Fastening System™

Proudly Made in the USA

Eco-Friendly

Bemis Manufacturing Co., Sheboygan Falls, WI 53085 | ToiletSeats.com | ph: 800.558.7651 | fx: 800.292.3647

Bemis Manufacturing Co. reserves the right to make revisions without notice to product specifications.

©2018 0B7012478

7600T

HOSPITALITY HEAVY-DUTY
PLASTIC TOILET SEAT

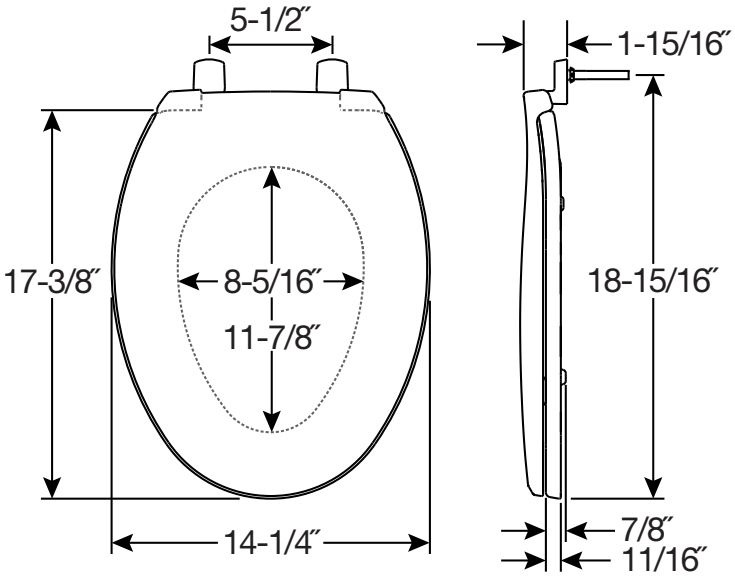

FEATURES:

- **STA-TITE®**
  Commercial Fastening System™
  Eliminates callbacks for loosened seats

SPECIFICATIONS:

Size: Elongated

Material: Plastic

Style: Closed Front with Cover

Ring Bumpers: Four

Hinges: Plastic with Non-Corroding 300 Series Stainless Steel Posts and Pintles

Hardware: STA-TITE® Commercial Fastening System™

Codes & Standards: Complies with IAPMO/ANSI Z124.5 Performance Standards Heavy-Duty Commercial

Proudly Made in the USA

Eco-Friendly

Bemis Manufacturing Co., Sheboygan Falls, WI 53085 | ToiletSeats.com | ph: 800.558.7651 | fx: 800.292.3647

Bemis Manufacturing Co. reserves the right to make revisions without notice to product specifications.
©2018 0B7012476

760T

HOSPITALITY HEAVY-DUTY
PLASTIC TOILET SEAT

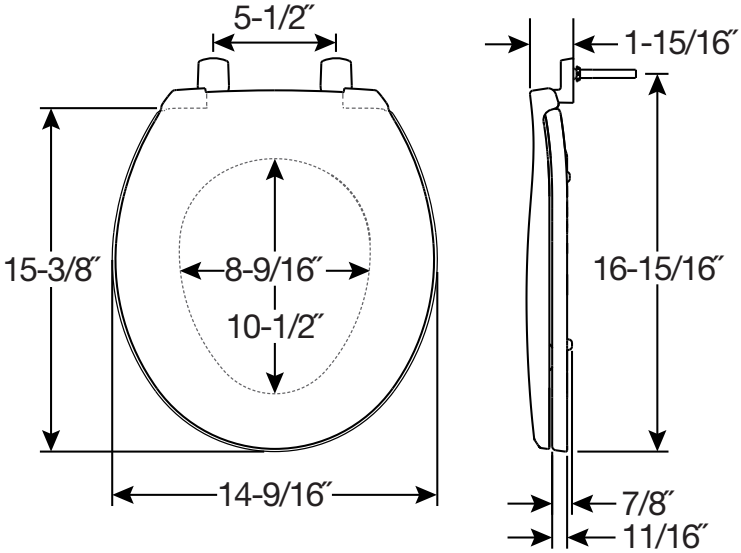

FEATURES:

- **STA-TITE®**
  Commercial Fastening System™
  Eliminates callbacks for loosened seats

SPECIFICATIONS:

Size: Round

Material: Plastic

Style: Closed Front with Cover

Ring Bumpers: Four

Hinges: Plastic with Non-Corroding 300 Series Stainless Steel Posts and Pintles

Hardware: STA-TITE® Commercial Fastening System™

Codes & Standards: Complies with IAPMO/ANSI Z124.5 Performance Standards Heavy-Duty Commercial

Proudly Made in the USA

Eco-Friendly

Bemis Manufacturing Co., Sheboygan Falls, WI 53085 | ToiletSeats.com | ph: 800.558.7651 | fx: 800.292.3647

Bemis Manufacturing Co. reserves the right to make revisions without notice to product specifications.
©2018 0B7012476

7600TJ

HOSPITALITY HEAVY-DUTY
PLASTIC TOILET SEAT

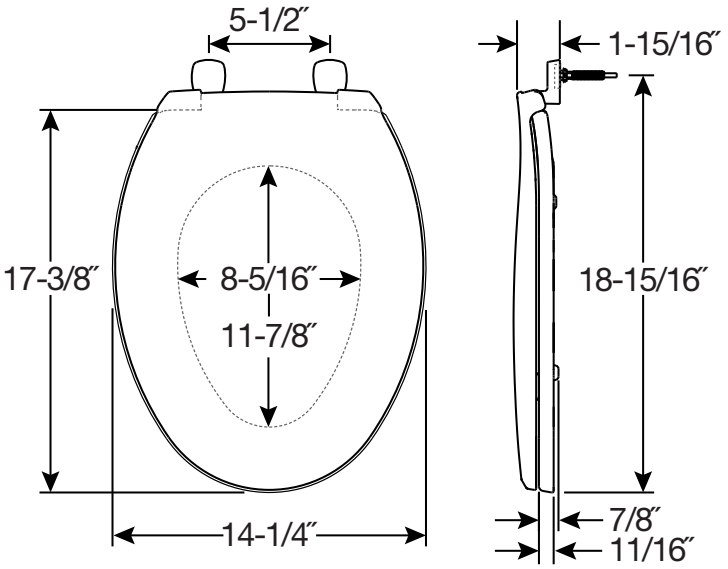

FEATURES:

- **STA-TITE®**
  Commercial Fastening System™
  Eliminates callbacks for loosened seats
- **JUST•LIFT®**
  Provides 1-½″ lift height for enhanced cleanability

SPECIFICATIONS:

Size: Elongated

Material: Plastic

Style: Closed Front with Cover

Ring Bumpers: Four

Hinges: Plastic Just•Lift® Hinges with Non-Corroding 300 Series Stainless Steel Posts and Pintles

Hardware: STA-TITE® Commercial Fastening System™

Codes & Standards: Complies with IAPMO/ANSI Z124.5 Performance Standards Heavy-Duty Commercial

Proudly Made in the USA

Eco-Friendly

Bemis Manufacturing Co., Sheboygan Falls, WI 53085 | ToiletSeats.com | ph: 800.558.7651 | fx: 800.292.3647

Bemis Manufacturing Co. reserves the right to make revisions without notice to product specifications.
©2018 0B7012475

7650T

HOSPITALITY HEAVY-DUTY
PLASTIC TOILET SEAT

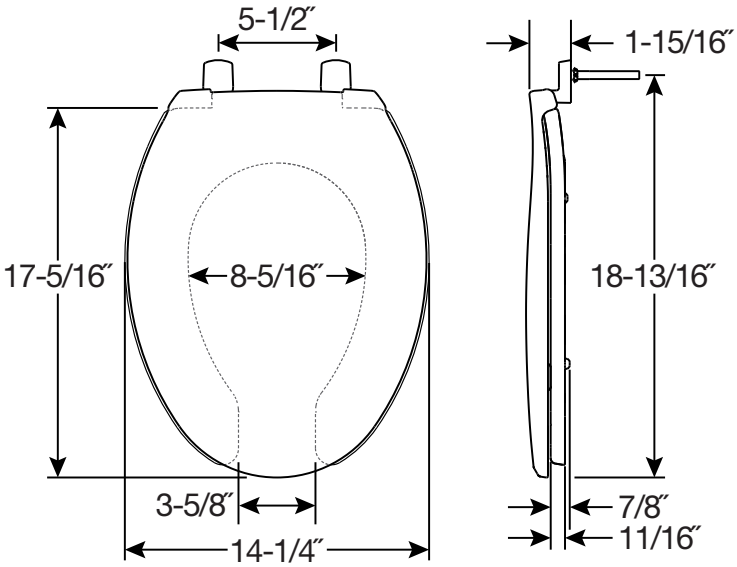

FEATURES:

- **STA-TITE®**
  Commercial Fastening System™
  Eliminates callbacks for loosened seats

SPECIFICATIONS:

Size: Elongated

Material: Plastic

Style: Open Front with Cover

Ring Bumpers: Four

Hinges: Plastic with Non-Corroding 300 Series Stainless Steel Posts and Pintles

Hardware: STA-TITE® Commercial Fastening System™

Codes & Standards: Complies with IAPMO/ANSI Z124.5 Performance Standards Heavy-Duty Commercial

Proudly Made in the USA

Eco-Friendly

Bemis Manufacturing Co., Sheboygan Falls, WI 53085 | ToiletSeats.com | ph: 800.558.7651 | fx: 800.292.3647

Bemis Manufacturing Co. reserves the right to make revisions without notice to product specifications.
©2018 0B7012474

7650TJ

HOSPITALITY HEAVY-DUTY
PLASTIC TOILET SEAT

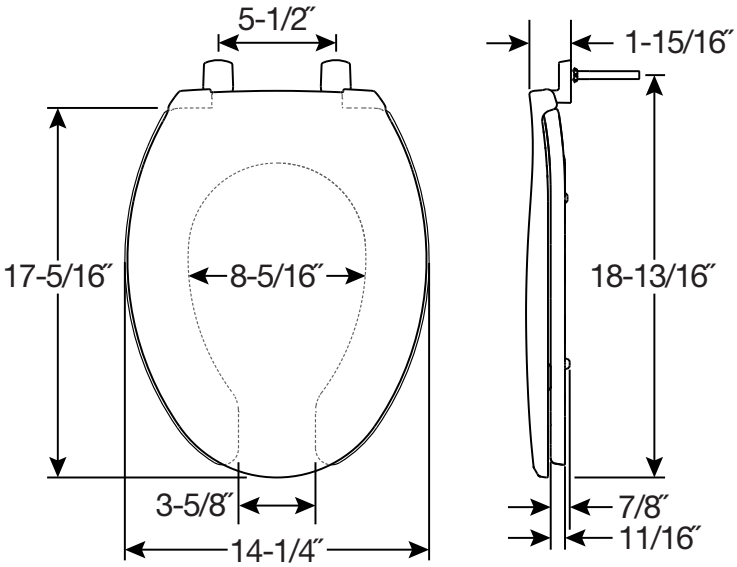

FEATURES:

- **STA-TITE®**
  Commercial Fastening System™
  Eliminates callbacks for loosened seats
- **JUST•LIFT®**
  Provides 1-½″ lift height for enhanced cleanability

SPECIFICATIONS:

Size: Elongated

Material: Plastic

Style: Open Front with Cover

Ring Bumpers: Four

Hinges: Plastic Just•Lift® Hinges with Non-Corroding 300 Series Stainless Steel Posts and Pintles

Hardware: STA-TITE® Commercial Fastening System™

Codes & Standards: Complies with IAPMO/ANSI Z124.5 Performance Standards Heavy-Duty Commercial

Proudly Made in the USA

Eco-Friendly

Bemis Manufacturing Co., Sheboygan Falls, WI 53085 | ToiletSeats.com | ph: 800.558.7651 | fx: 800.292.3647

Bemis Manufacturing Co. reserves the right to make revisions without notice to product specifications.
©2018 0B7012473

7800TDG

HOSPITALITY HEAVY-DUTY
PLASTIC TOILET SEAT

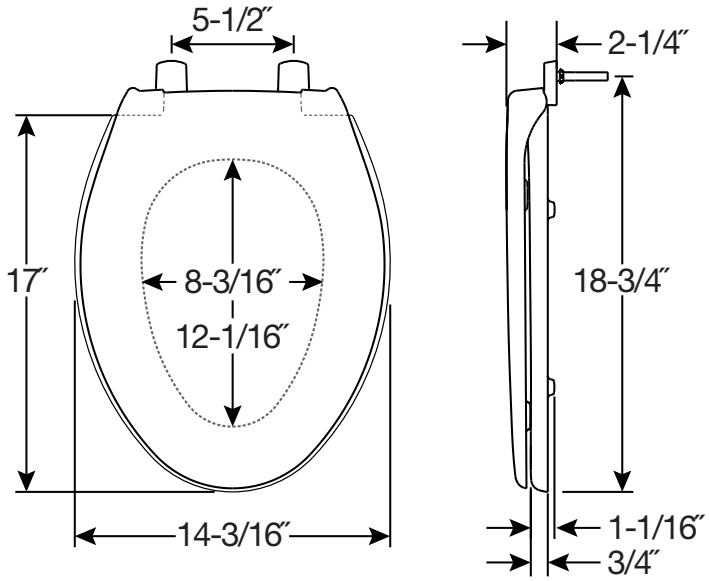

FEATURES:

- **STA-TITE®**
  Commercial Fastening System™
  Eliminates callbacks for loosened seats
- **DuraGuard® Antimicrobial ***
  Built-In Seat Protection™

** DuraGuard Antimicrobial does not protect users against bacteria, viruses, or other disease organisms. Always clean and wash this product thoroughly before and after each use.*

SPECIFICATIONS:

Size: Elongated

Material: Plastic

Style: Closed Front with Cover

Ring Bumpers: Four

Hinges: Plastic with Non-Corroding 300 Series Stainless Steel Posts and Pintles

Hardware: STA-TITE® Commercial Fastening System™

Codes & Standards: Complies with IAPMO/ANSI Z124.5 Performance Standards Heavy-Duty Commercial

Proudly Made in the USA

Eco-Friendly

Bemis Manufacturing Co., Sheboygan Falls, WI 53085 | ToiletSeats.com | ph: 800.558.7651 | fx: 800.292.3647

Bemis Manufacturing Co. reserves the right to make revisions without notice to product specifications.
©2018 0B7012472

7800TJDG

HOSPITALITY HEAVY-DUTY
PLASTIC TOILET SEAT

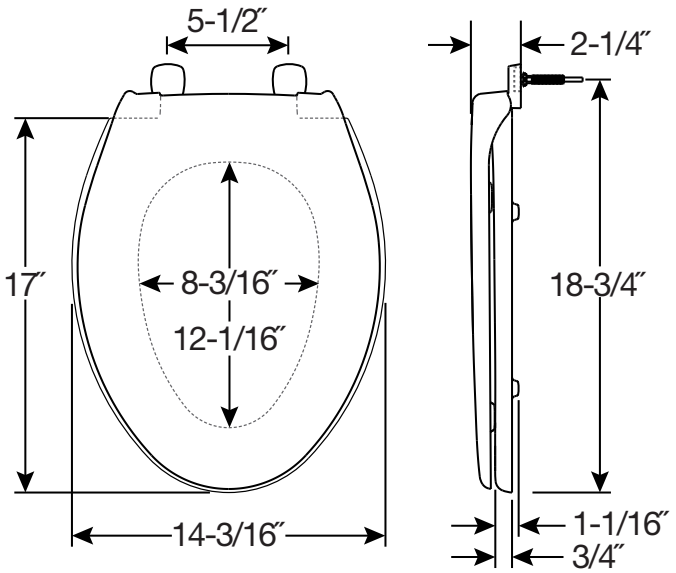

FEATURES:

- **STA-TITE®**
  Commercial Fastening System™
  Eliminates callbacks for loosened seats
- **JUST•LIFT®**
  Provides 1-½″ lift height for enhanced cleanability
- **DuraGuard® Antimicrobial ***
  Built-In Seat Protection™

** DuraGuard Antimicrobial does not protect users against bacteria, viruses, or other disease organisms. Always clean and wash this product thoroughly before and after each use.*

SPECIFICATIONS:

Size: Elongated

Material: Plastic

Style: Closed Front with Cover

Ring Bumpers: Four

Hinges: Plastic Just•Lift® Hinges with Non-Corroding 300 Series Stainless Steel Posts and Pintles

Hardware: STA-TITE® Commercial Fastening System™

Codes & Standards: Complies with IAPMO/ANSI Z124.5 Performance Standards Heavy-Duty Commercial

Proudly Made in the USA

Eco-Friendly

Bemis Manufacturing Co., Sheboygan Falls, WI 53085 | ToiletSeats.com | ph: 800.558.7651 | fx: 800.292.3647

Bemis Manufacturing Co. reserves the right to make revisions without notice to product specifications.
©2018 0B7012471

7850TDG

HOSPITALITY HEAVY-DUTY
PLASTIC TOILET SEAT

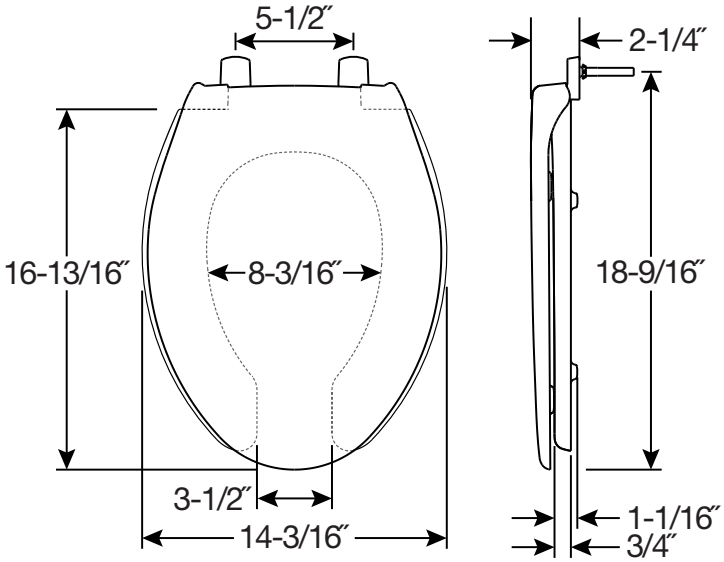

FEATURES:

- **STA-TITE®**
  Commercial Fastening System™
  Eliminates callbacks for loosened seats
- **DuraGuard® Antimicrobial ***
  Built-In Seat Protection™

** DuraGuard Antimicrobial does not protect users against bacteria, viruses, or other disease organisms. Always clean and wash this product thoroughly before and after each use.*

SPECIFICATIONS:

Size: Elongated

Material: Plastic

Style: Open Front with Cover

Ring Bumpers: Four

Hinges: Plastic with Non-Corroding 300 Series Stainless Steel Posts and Pintles

Hardware: STA-TITE® Commercial Fastening System™

Codes & Standards: Complies with IAPMO/ANSI Z124.5 Performance Standards Heavy-Duty Commercial

Proudly Made in the USA

Eco-Friendly

Bemis Manufacturing Co., Sheboygan Falls, WI 53085 | ToiletSeats.com | ph: 800.558.7651 | fx: 800.292.3647

Bemis Manufacturing Co. reserves the right to make revisions without notice to product specifications.
©2018 0B7012470

7750TDG

HOSPITALITY HEAVY-DUTY
PLASTIC TOILET SEAT

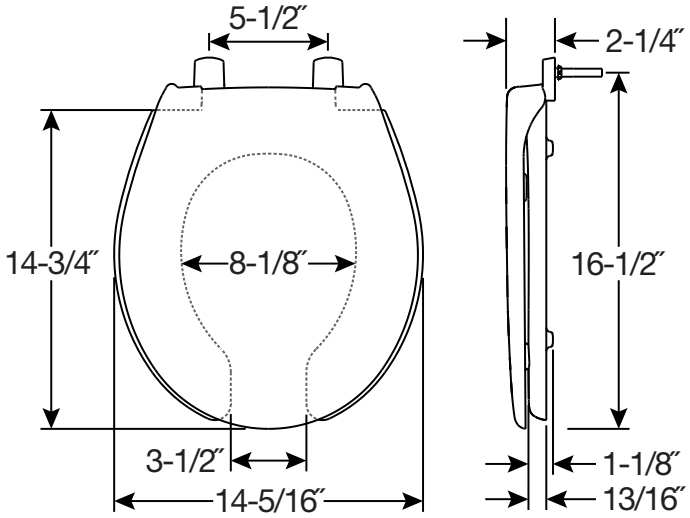

FEATURES:

- **STA-TITE®**
  Commercial Fastening System™
  Eliminates callbacks for loosened seats
- **DuraGuard® Antimicrobial ***
  Built-In Seat Protection™

** DuraGuard Antimicrobial does not protect users against bacteria, viruses, or other disease organisms. Always clean and wash this product thoroughly before and after each use.*

SPECIFICATIONS:

Size: Round

Material: Plastic

Style: Open Front with Cover

Ring Bumpers: Four

Hinges: Plastic with Non-Corroding 300 Series Stainless Steel Posts and Pintles

Hardware: STA-TITE® Commercial Fastening System™

Codes & Standards: Complies with IAPMO/ANSI Z124.5 Performance Standards Heavy-Duty Commercial

Proudly Made in the USA

Eco-Friendly

Bemis Manufacturing Co., Sheboygan Falls, WI 53085 | ToiletSeats.com | ph: 800.558.7651 | fx: 800.292.3647

Bemis Manufacturing Co. reserves the right to make revisions without notice to product specifications.
©2018 0B7012470

7850TJDG

HOSPITALITY HEAVY-DUTY
PLASTIC TOILET SEAT

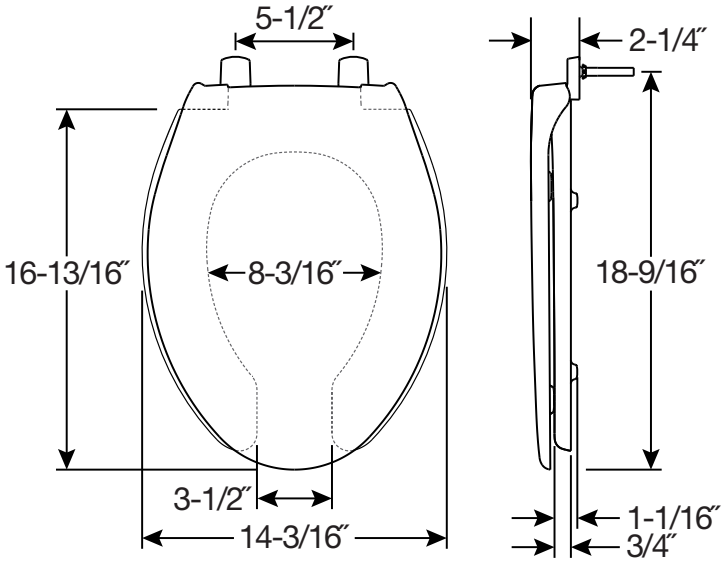

FEATURES:

- **STA-TITE®**
  Commercial Fastening System™
  Eliminates callbacks for loosened seats
- **JUST•LIFT®**
  Provides 1-½″ lift height for enhanced cleanability
- **DuraGuard® Antimicrobial ***
  Built-In Seat Protection™

** DuraGuard Antimicrobial does not protect users against bacteria, viruses, or other disease organisms. Always clean and wash this product thoroughly before and after each use.*

SPECIFICATIONS:

Size: Elongated

Material: Plastic

Style: Open Front with Cover

Ring Bumpers: Four

Hinges: Plastic Just•Lift® Hinges with Non-Corroding 300 Series Stainless Steel Posts and Pintles

Hardware: STA-TITE® Commercial Fastening System™

Codes & Standards: Complies with IAPMO/ANSI Z124.5 Performance Standards Heavy-Duty Commercial

Proudly Made in the USA

Eco-Friendly

Bemis Manufacturing Co., Sheboygan Falls, WI 53085 | ToiletSeats.com | ph: 800.558.7651 | fx: 800.292.3647

Bemis Manufacturing Co. reserves the right to make revisions without notice to product specifications.
©2018 0B7012469

7900TDGSL

HOSPITALITY HEAVY-DUTY
PLASTIC TOILET SEAT

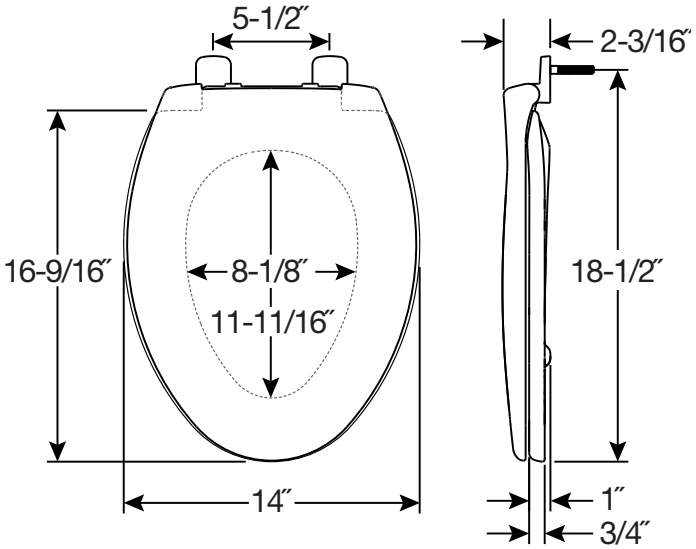

FEATURES:

- **STA-TITE®**
  Commercial Fastening System™
  Eliminates callbacks for loosened seats
- **Whisper•Close®**
  Slowly and quietly closes
- **DuraGuard® Antimicrobial ***
  Built-In Seat Protection™
- **Super Grip Bumpers™**
  Provides greater stability

** DuraGuard Antimicrobial does not protect users against bacteria, viruses, or other disease organisms. Always clean and wash this product thoroughly before and after each use.*

SPECIFICATIONS:

Size: Elongated

Material: Plastic

Style: Closed Front with Cover

Ring Bumpers: Two

Hinges: Plastic with Non-Corroding 300 Series Stainless Steel Posts

Hardware: STA-TITE® Commercial Fastening System™

Codes & Standards: Complies with IAPMO/ANSI Z124.5 Performance Standards Heavy-Duty Commercial

Proudly Made in the USA

Eco-Friendly

Bemis Manufacturing Co., Sheboygan Falls, WI 53085 | ToiletSeats.com | ph: 800.558.7651 | fx: 800.292.3647

Bemis Manufacturing Co. reserves the right to make revisions without notice to product specifications.
©2018 0B7012468

790TDGSL

HOSPITALITY HEAVY-DUTY
PLASTIC TOILET SEAT

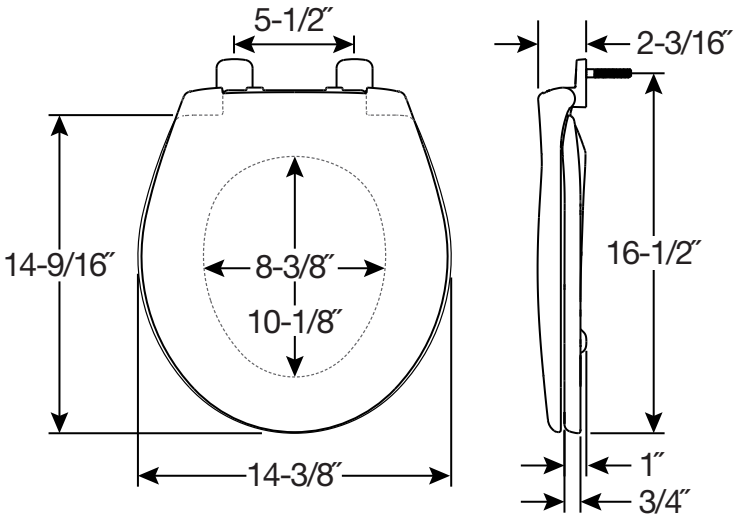

FEATURES:

- **STA-TITE®**
  Commercial Fastening System™
  Eliminates callbacks for loosened seats
- **Whisper•Close®**
  Slowly and quietly closes
- **DuraGuard® Antimicrobial ***
  Built-In Seat Protection™
- **Super Grip Bumpers™**
  Provides greater stability

** DuraGuard Antimicrobial does not protect users against bacteria, viruses, or other disease organisms. Always clean and wash this product thoroughly before and after each use.*

SPECIFICATIONS:

Size: Round

Material: Plastic

Style: Closed Front with Cover

Ring Bumpers: Two

Hinges: Plastic with Non-Corroding 300 Series Stainless Steel Posts

Hardware: STA-TITE® Commercial Fastening System™

Codes & Standards: Complies with IAPMO/ANSI Z124.5 Performance Standards Heavy-Duty Commercial

Proudly Made in the USA

Eco-Friendly

Bemis Manufacturing Co., Sheboygan Falls, WI 53085 | ToiletSeats.com | ph: 800.558.7651 | fx: 800.292.3647

Bemis Manufacturing Co. reserves the right to make revisions without notice to product specifications.
©2018 0B7012468

1900CCP

COMMERCIAL PLASTIC TOILET SEAT

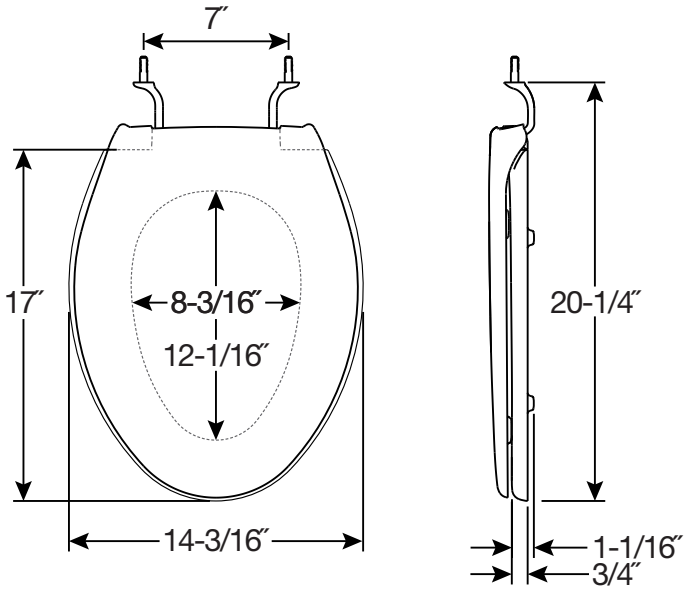

FEATURES:

- **7″ Bolt Spread**
  Fits Case 1100 bowls

SPECIFICATIONS:

Size: Elongated

Material: Plastic

Style: Closed Front with Cover

Ring Bumpers: Four

Hinges: Chrome-Plated Brass

Hardware: Non-Corroding 300 Series Stainless Steel Washers and Nuts

Fits: Case Bowls

Proudly Made in the USA

Eco-Friendly

Bemis Manufacturing Co., Sheboygan Falls, WI 53085 | ToiletSeats.com | ph: 800.558.7651 | fx: 800.292.3647

Bemis Manufacturing Co. reserves the right to make revisions without notice to product specifications.

©2018 0B7012486

800CCP

COMMERCIAL PLASTIC TOILET SEAT

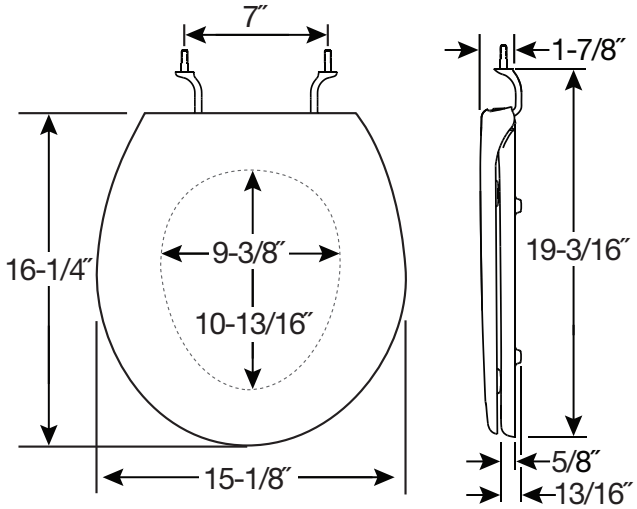

FEATURES:

- **7″ Bolt Spread**
  Fits Case 1000 bowls

SPECIFICATIONS:

Size: Round

Material: Plastic

Style: Closed Front with Cover

Ring Bumpers: Four

Hinges: Chrome-Plated Brass

Hardware: Non-Corroding 300 Series Stainless Steel Washers and Nuts

Fits: Case Bowls

Proudly Made in the USA

Eco-Friendly

Bemis Manufacturing Co., Sheboygan Falls, WI 53085 | ToiletSeats.com | ph: 800.558.7651 | fx: 800.292.3647

Bemis Manufacturing Co. reserves the right to make revisions without notice to product specifications.

©2018 0B7012486

MEDIC-AID®

1000CPT

PARAMONT™ PLASTIC TOILET SEAT

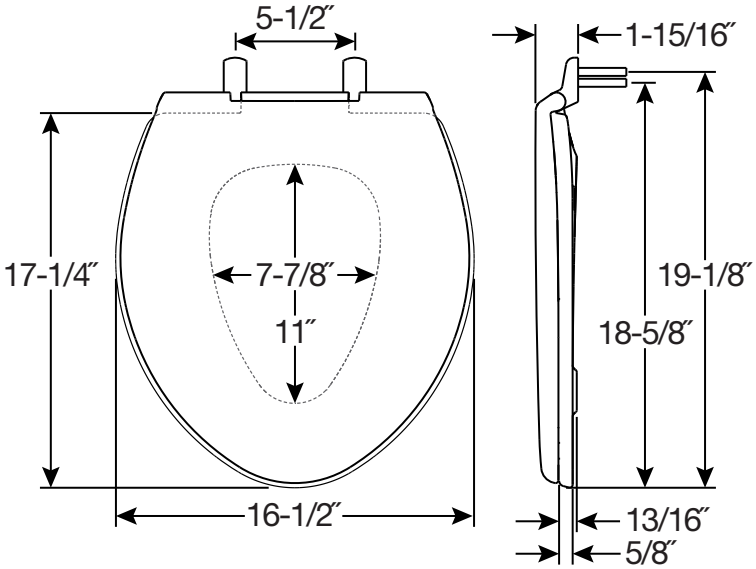

FEATURES:

- **STA-TITE®**
  Commercial Fastening System™
  Eliminates callbacks for loosened seats
- **2-Position Hinges**
  Fits round or elongated bowls
- **Oversized for Comfort**

SPECIFICATIONS:

Size: Round / Elongated

Material: Plastic

Style: Closed Front with Cover

Ring Bumpers: Four

Hinges: Chrome with Non-Corroding 300 Series Stainless Steel Posts and Pintles

Hardware: STA-TITE® Commercial Fastening System™

Weight Capacity: 1,000 lbs *

Codes & Standards: Complies with IAPMO/ANSI Z124.5 Performance Standards Heavy-Duty Commercial

** Always check the load-bearing weight of the water closet.*

Proudly Made in the USA

Eco-Friendly

Bemis Manufacturing Co., Sheboygan Falls, WI 53085 | ToiletSeats.com | ph: 800.558.7651 | fx: 800.292.3647

Bemis Manufacturing Co. reserves the right to make revisions without notice to product specifications.
©2018 0B7012440

2L2150T

MEDIC-AID® HEAVY-DUTY
PLASTIC TOILET SEAT

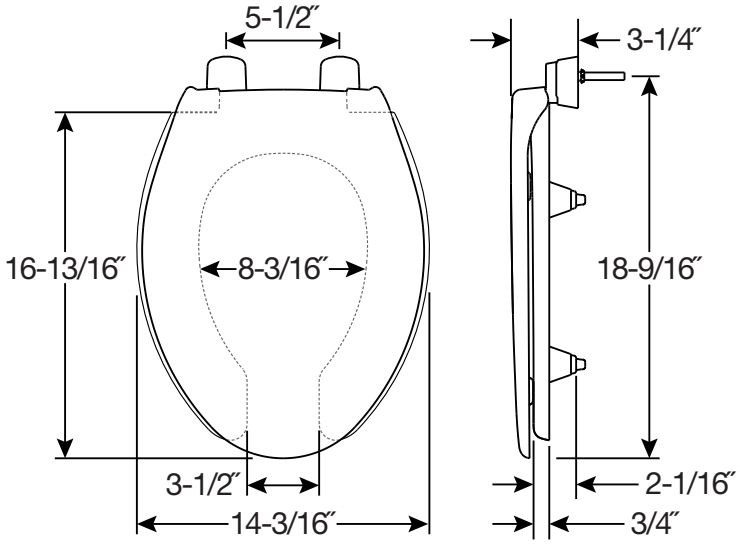

FEATURES:

- **STA-TITE® Commercial Fastening System™**
  Eliminates callbacks for loosened seats
- **DuraGuard® Antimicrobial ***
  Built-In Seat Protection™
- **Elevated Hinges / Bumpers**
  Provides 2″ of height
- **Super Grip Bumpers™**
  Provides greater stability

** DuraGuard Antimicrobial does not protect users against bacteria, viruses, or other disease organisms. Always clean and wash this product thoroughly before and after each use.*

SPECIFICATIONS:

Size: Elongated

Material: Plastic

Style: Open Front with Cover

Ring Bumpers: Four

Hinges: Plastic with Non-Corroding 300 Series Stainless Steel Posts and Pintles

Hardware: STA-TITE® Commercial Fastening System™

Codes & Standards: Complies with IAPMO/ANSI Z124.5 Performance Standards Heavy-Duty Commercial

Proudly Made in the USA

Eco-Friendly

Bemis Manufacturing Co., Sheboygan Falls, WI 53085 | ToiletSeats.com | ph: 800.558.7651 | fx: 800.292.3647

Bemis Manufacturing Co. reserves the right to make revisions without notice to product specifications.
©2018 0B7012427

2L2050T

MEDIC-AID® HEAVY-DUTY
PLASTIC TOILET SEAT

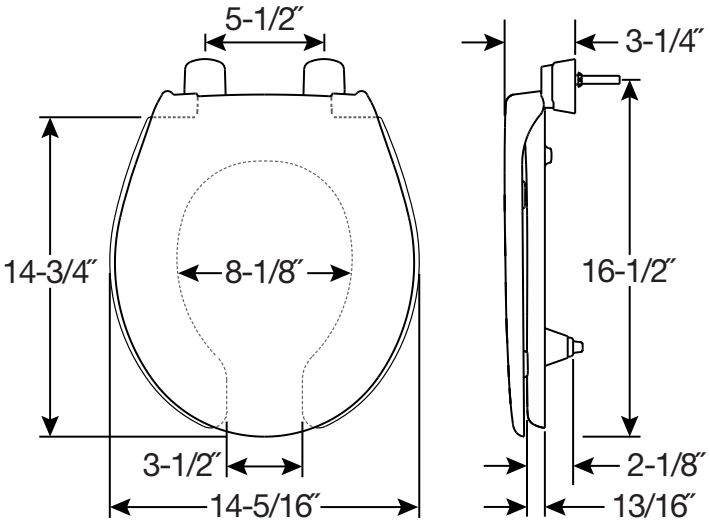

FEATURES:

- **STA-TITE® Commercial Fastening System™**
  Eliminates callbacks for loosened seats
- **DuraGuard® Antimicrobial ***
  Built-In Seat Protection™
- **Elevated Hinges / Bumpers**
  Provides 2″ of height
- **Super Grip Bumpers™**
  Provides greater stability

** DuraGuard Antimicrobial does not protect users against bacteria, viruses, or other disease organisms. Always clean and wash this product thoroughly before and after each use.*

SPECIFICATIONS:

Size: Round

Material: Plastic

Style: Open Front with Cover

Ring Bumpers: Two

Hinges: Plastic with Non-Corroding 300 Series Stainless Steel Posts and Pintles

Hardware: STA-TITE® Commercial Fastening System™

Codes & Standards: Complies with IAPMO/ANSI Z124.5 Performance Standards Heavy-Duty Commercial

Proudly Made in the USA

Eco-Friendly

Bemis Manufacturing Co., Sheboygan Falls, WI 53085 | ToiletSeats.com | ph: 800.558.7651 | fx: 800.292.3647

Bemis Manufacturing Co. reserves the right to make revisions without notice to product specifications.
©2018 0B7012427

2L2155T

MEDIC-AID® HEAVY-DUTY
PLASTIC TOILET SEAT

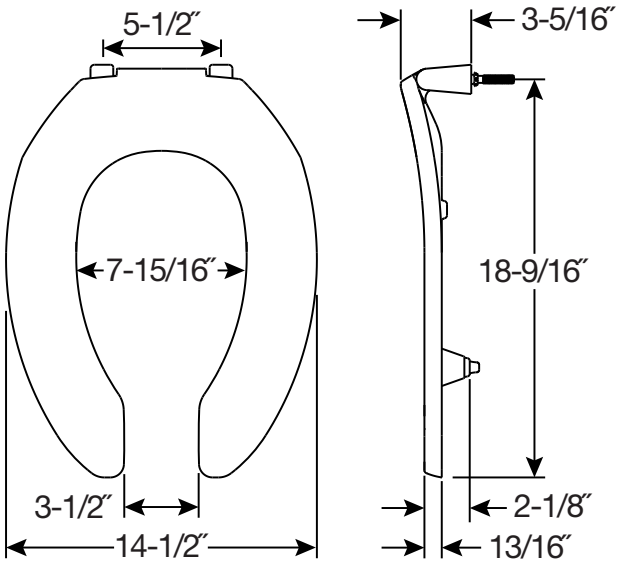

FEATURES:

- **STA-TITE® Commercial Fastening System™**
  Eliminates callbacks for loosened seats
- **DuraGuard® Antimicrobial ***
  Built-In Seat Protection™
- **Elevated Hinges / Bumpers**
  Provides 2″ of height
- **Super Grip Bumpers™**
  Provides greater stability

** DuraGuard Antimicrobial does not protect users against bacteria, viruses, or other disease organisms. Always clean and wash this product thoroughly before and after each use.*

SPECIFICATIONS:

Size: Elongated

Material: Plastic

Style: Open Front less Cover

Ring Bumpers: Two

Hinges: Plastic with Non-Corroding 300 Series Stainless Steel Posts and Pintles

Hardware: STA-TITE® Commercial Fastening System™

Codes & Standards: Complies with IAPMO/ANSI Z124.5 Performance Standards Heavy-Duty Commercial

Proudly Made in the USA

Eco-Friendly

Bemis Manufacturing Co., Sheboygan Falls, WI 53085 | ToiletSeats.com | ph: 800.558.7651 | fx: 800.292.3647

Bemis Manufacturing Co. reserves the right to make revisions without notice to product specifications.
©2018 0B7012428

2L2055T

MEDIC-AID® HEAVY-DUTY
PLASTIC TOILET SEAT

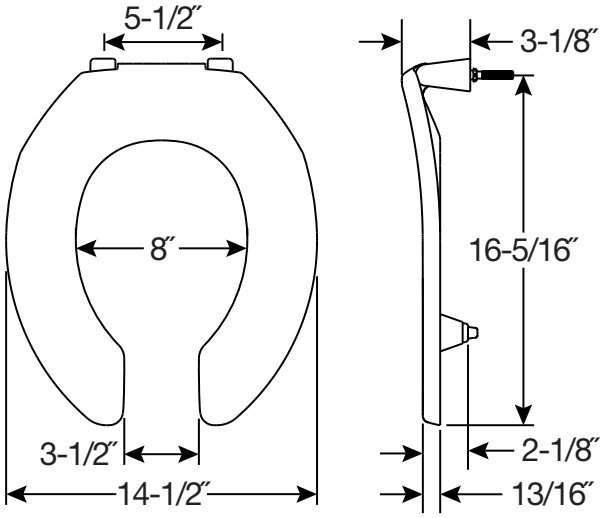

FEATURES:

- **STA-TITE® Commercial Fastening System™**
  Eliminates callbacks for loosened seats
- **DuraGuard® Antimicrobial ***
  Built-In Seat Protection™
- **Elevated Hinges / Bumpers**
  Provides 2″ of height
- **Super Grip Bumpers™**
  Provides greater stability

** DuraGuard Antimicrobial does not protect users against bacteria, viruses, or other disease organisms. Always clean and wash this product thoroughly before and after each use.*

SPECIFICATIONS:

Size: Round

Material: Plastic

Style: Open Front less Cover

Ring Bumpers: Two

Hinges: Plastic with Non-Corroding 300 Series Stainless Steel Posts and Pintles

Hardware: STA-TITE® Commercial Fastening System™

Codes & Standards: Complies with IAPMO/ANSI Z124.5 Performance Standards Heavy-Duty Commercial

Proudly Made in the USA

Eco-Friendly

Bemis Manufacturing Co., Sheboygan Falls, WI 53085 | ToiletSeats.com | ph: 800.558.7651 | fx: 800.292.3647

Bemis Manufacturing Co. reserves the right to make revisions without notice to product specifications.
©2018 0B7012428

3L2150T

MEDIC-AID® HEAVY-DUTY
PLASTIC TOILET SEAT

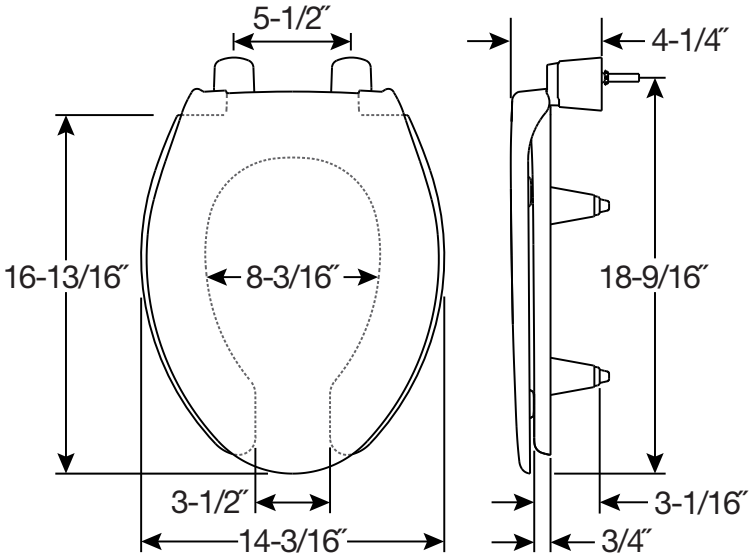

FEATURES:

- **STA-TITE® Commercial Fastening System™**
  Eliminates callbacks for loosened seats
- **DuraGuard® Antimicrobial ***
  Built-In Seat Protection™
- **Elevated Hinges / Bumpers**
  Provides 3″ of height
- **Super Grip Bumpers™**
  Provides greater stability

** DuraGuard Antimicrobial does not protect users against bacteria, viruses, or other disease organisms. Always clean and wash this product thoroughly before and after each use.*

SPECIFICATIONS:

Size: Elongated

Material: Plastic

Style: Open Front with Cover

Ring Bumpers: Four

Hinges: Plastic with Non-Corroding 300 Series Stainless Steel Posts and Pintles

Hardware: STA-TITE® Commercial Fastening System™

Codes & Standards: Complies with IAPMO/ANSI Z124.5 Performance Standards Heavy-Duty Commercial

Proudly Made in the USA

Eco-Friendly

Bemis Manufacturing Co., Sheboygan Falls, WI 53085 | ToiletSeats.com | ph: 800.558.7651 | fx: 800.292.3647

Bemis Manufacturing Co. reserves the right to make revisions without notice to product specifications.
©2018 0B7012429

3L2050T

MEDIC-AID® HEAVY-DUTY
PLASTIC TOILET SEAT

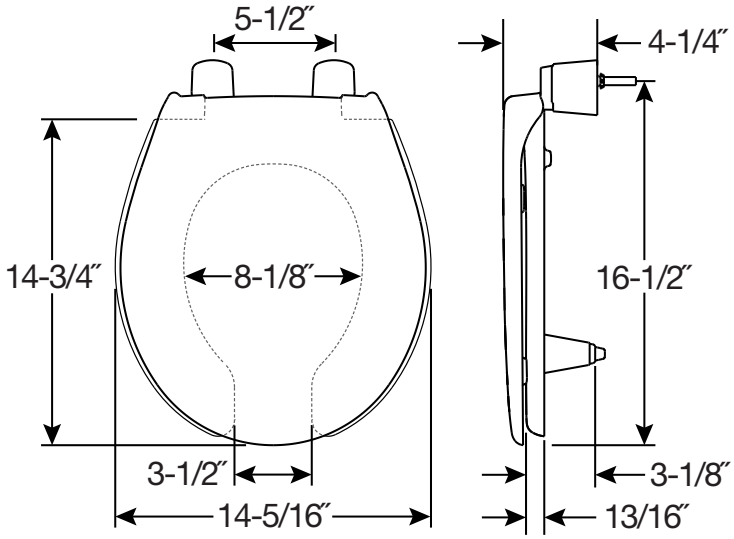

FEATURES:

- **STA-TITE® Commercial Fastening System™**
  Eliminates callbacks for loosened seats
- **DuraGuard® Antimicrobial ***
  Built-In Seat Protection™
- **Elevated Hinges / Bumpers**
  Provides 3″ of height
- **Super Grip Bumpers™**
  Provides greater stability

** DuraGuard Antimicrobial does not protect users against bacteria, viruses, or other disease organisms. Always clean and wash this product thoroughly before and after each use.*

SPECIFICATIONS:

Size: Round

Material: Plastic

Style: Open Front with Cover

Ring Bumpers: Two

Hinges: Plastic with Non-Corroding 300 Series Stainless Steel Posts and Pintles

Hardware: STA-TITE® Commercial Fastening System™

Codes & Standards: Complies with IAPMO/ANSI Z124.5 Performance Standards Heavy-Duty Commercial

Proudly Made in the USA

Eco-Friendly

Bemis Manufacturing Co., Sheboygan Falls, WI 53085 | ToiletSeats.com | ph: 800.558.7651 | fx: 800.292.3647

Bemis Manufacturing Co. reserves the right to make revisions without notice to product specifications.
©2018 0B7012429

2L2155T

MEDIC-AID® HEAVY-DUTY
PLASTIC TOILET SEAT

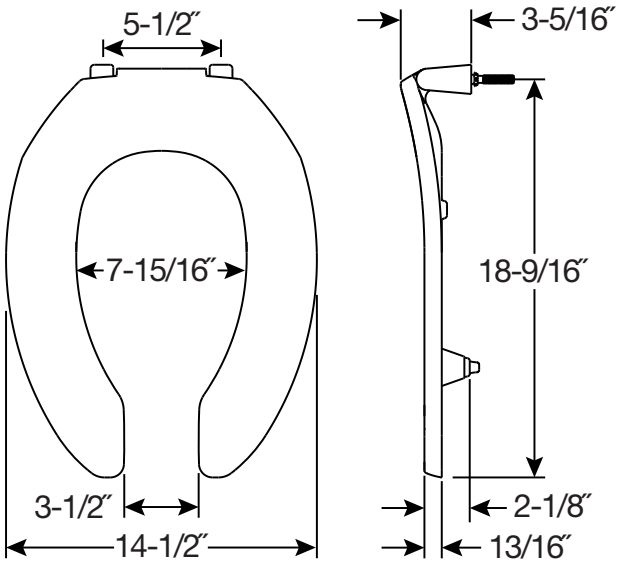

FEATURES:

- **STA-TITE® Commercial Fastening System™**
  Eliminates callbacks for loosened seats
- **DuraGuard® Antimicrobial ***
  Built-In Seat Protection™
- **Elevated Hinges / Bumpers**
  Provides 2″ of height
- **Super Grip Bumpers™**
  Provides greater stability

** DuraGuard Antimicrobial does not protect users against bacteria, viruses, or other disease organisms. Always clean and wash this product thoroughly before and after each use.*

SPECIFICATIONS:

Size: Elongated

Material: Plastic

Style: Open Front less Cover

Ring Bumpers: Two

Hinges: Plastic with Non-Corroding 300 Series Stainless Steel Posts and Pintles

Hardware: STA-TITE® Commercial Fastening System™

Codes & Standards: Complies with IAPMO/ANSI Z124.5 Performance Standards Heavy-Duty Commercial

Proudly Made in the USA

Eco-Friendly

Bemis Manufacturing Co., Sheboygan Falls, WI 53085 | ToiletSeats.com | ph: 800.558.7651 | fx: 800.292.3647

Bemis Manufacturing Co. reserves the right to make revisions without notice to product specifications.
©2018 0B7012428

2L2055T

MEDIC-AID® HEAVY-DUTY
PLASTIC TOILET SEAT

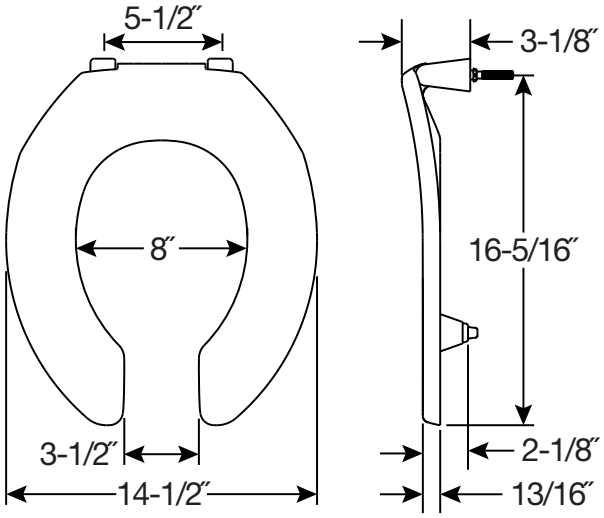

FEATURES:

- **STA-TITE® Commercial Fastening System™**
  Eliminates callbacks for loosened seats
- **DuraGuard® Antimicrobial ***
  Built-In Seat Protection™
- **Elevated Hinges / Bumpers**
  Provides 2″ of height
- **Super Grip Bumpers™**
  Provides greater stability

** DuraGuard Antimicrobial does not protect users against bacteria, viruses, or other disease organisms. Always clean and wash this product thoroughly before and after each use.*

SPECIFICATIONS:

Size: Round

Material: Plastic

Style: Open Front less Cover

Ring Bumpers: Two

Hinges: Plastic with Non-Corroding 300 Series Stainless Steel Posts and Pintles

Hardware: STA-TITE® Commercial Fastening System™

Codes & Standards: Complies with IAPMO/ANSI Z124.5 Performance Standards Heavy-Duty Commercial

Proudly Made in the USA

Eco-Friendly

Bemis Manufacturing Co., Sheboygan Falls, WI 53085 | ToiletSeats.com | ph: 800.558.7651 | fx: 800.292.3647

Bemis Manufacturing Co. reserves the right to make revisions without notice to product specifications.
©2018 0B7012428

3L2155T

MEDIC-AID® HEAVY-DUTY
PLASTIC TOILET SEAT

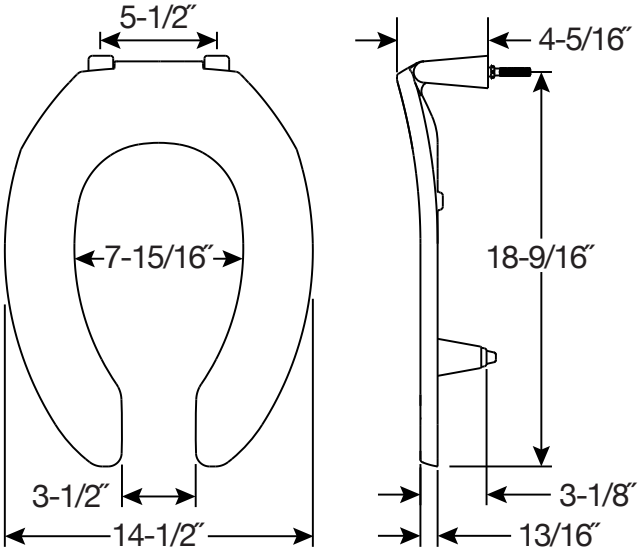

FEATURES:

- **STA-TITE® Commercial Fastening System™**
  Eliminates callbacks for loosened seats
- **DuraGuard® Antimicrobial ***
  Built-In Seat Protection™
- **Elevated Hinges / Bumpers**
  Provides 3″ of height
- **Super Grip Bumpers™**
  Provides greater stability

** DuraGuard Antimicrobial does not protect users against bacteria, viruses, or other disease organisms. Always clean and wash this product thoroughly before and after each use.*

SPECIFICATIONS:

Size: Elongated

Material: Plastic

Style: Open Front less Cover

Ring Bumpers: Two

Hinges: Plastic with Non-Corroding 300 Series Stainless Steel Posts and Pintles

Hardware: STA-TITE® Commercial Fastening System™

Codes & Standards: Complies with IAPMO/ANSI Z124.5 Performance Standards Heavy-Duty Commercial

Proudly Made in the USA

Eco-Friendly

Bemis Manufacturing Co., Sheboygan Falls, WI 53085 | ToiletSeats.com | ph: 800.558.7651 | fx: 800.292.3647

Bemis Manufacturing Co. reserves the right to make revisions without notice to product specifications.
©2018 0B7012430

3L2055T

MEDIC-AID® HEAVY-DUTY
PLASTIC TOILET SEAT

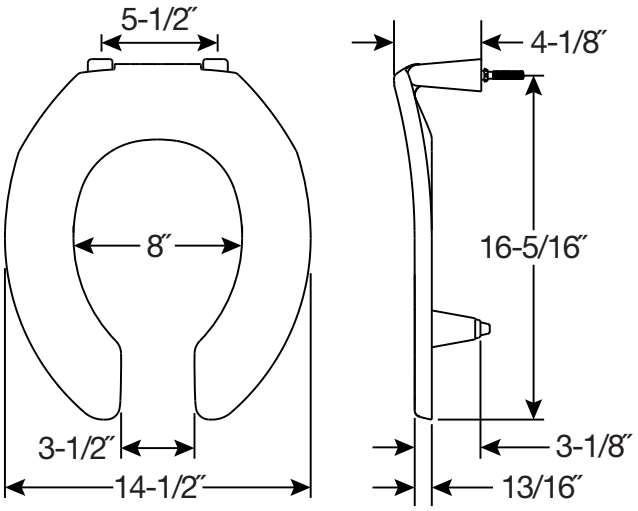

FEATURES:

- **STA-TITE® Commercial Fastening System™**
  Eliminates callbacks for loosened seats
- **DuraGuard® Antimicrobial ***
  Built-In Seat Protection™
- **Elevated Hinges / Bumpers**
  Provides 3″ of height
- **Super Grip Bumpers™**
  Provides greater stability

** DuraGuard Antimicrobial does not protect users against bacteria, viruses, or other disease organisms. Always clean and wash this product thoroughly before and after each use.*

SPECIFICATIONS:

Size: Round

Material: Plastic

Style: Open Front less Cover

Ring Bumpers: Two

Hinges: Plastic with Non-Corroding 300 Series Stainless Steel Posts and Pintles

Hardware: STA-TITE® Commercial Fastening System™

Codes & Standards: Complies with IAPMO/ANSI Z124.5 Performance Standards Heavy-Duty Commercial

Proudly Made in the USA

Eco-Friendly

Bemis Manufacturing Co., Sheboygan Falls, WI 53085 | ToiletSeats.com | ph: 800.558.7651 | fx: 800.292.3647

Bemis Manufacturing Co. reserves the right to make revisions without notice to product specifications.
©2018 0B7012430

4LET

HEAVY-DUTY PLASTIC LIFT
FOR TOILET SEAT

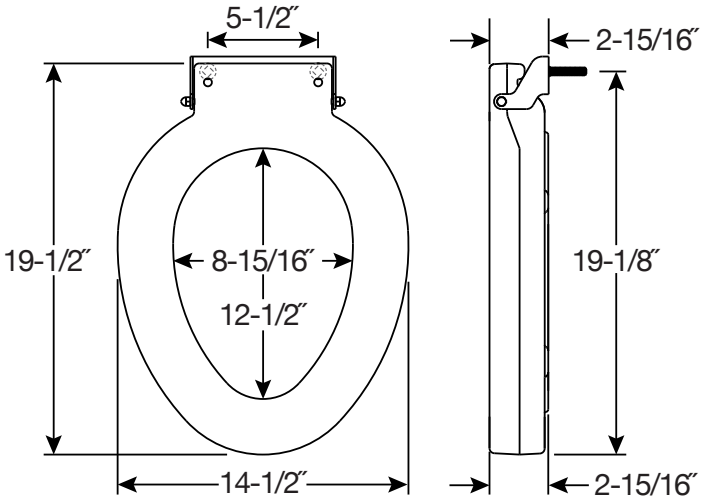

FEATURES:

- **STA-TITE®**
  Commercial Fastening System™
  Eliminates callbacks for loosened seats
- **Blow-Molded Plastic Riser ***
  Provides 4″ of additional height above rim once seat is installed

** It is recommended that only residential toilet seats be installed on lift/riser.*

SPECIFICATIONS:

Size: Elongated

Material: Plastic

Style: Lift / Riser (seat sold separately)

Ring Bumpers: Four

Hinges: Non-Corroding 300 Series Stainless Steel Mounting Bracket

Hardware: STA-TITE® Commercial Fastening System™

Proudly Made in the USA

Eco-Friendly

Bemis Manufacturing Co., Sheboygan Falls, WI 53085 | ToiletSeats.com | ph: 800.558.7651 | fx: 800.292.3647

Bemis Manufacturing Co. reserves the right to make revisions without notice to product specifications.
©2018 0B7012431

4LRT

HEAVY-DUTY PLASTIC LIFT
FOR TOILET SEAT

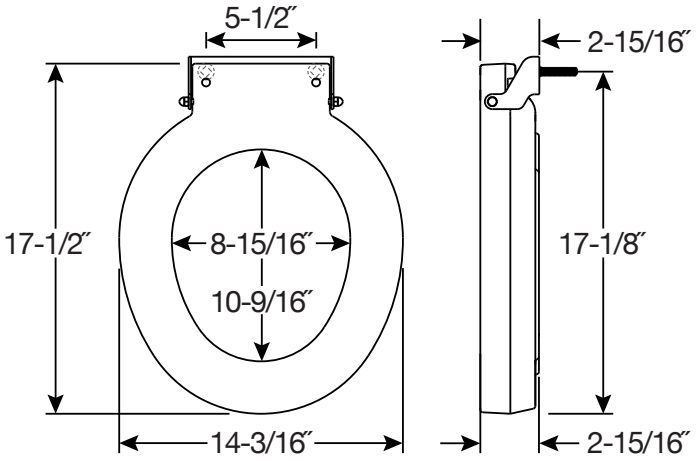

FEATURES:

- **STA-TITE®**
  Commercial Fastening System™
  Eliminates callbacks for loosened seats
- **Blow-Molded Plastic Riser ***
  Provides 4″ of additional height above rim once seat is installed

** It is recommended that only residential toilet seats be installed on lift/riser.*

SPECIFICATIONS:

Size: Round

Material: Plastic

Style: Lift / Riser (seat sold separately)

Ring Bumpers: Four

Hinges: Non-Corroding 300 Series Stainless Steel Mounting Bracket

Hardware: STA-TITE® Commercial Fastening System™

Proudly Made in the USA

Eco-Friendly

Bemis Manufacturing Co., Sheboygan Falls, WI 53085 | ToiletSeats.com | ph: 800.558.7651 | fx: 800.292.3647

Bemis Manufacturing Co. reserves the right to make revisions without notice to product specifications.
©2018 0B7012431

MA2100T

MEDIC-AID® HEAVY-DUTY
PLASTIC TOILET SEAT

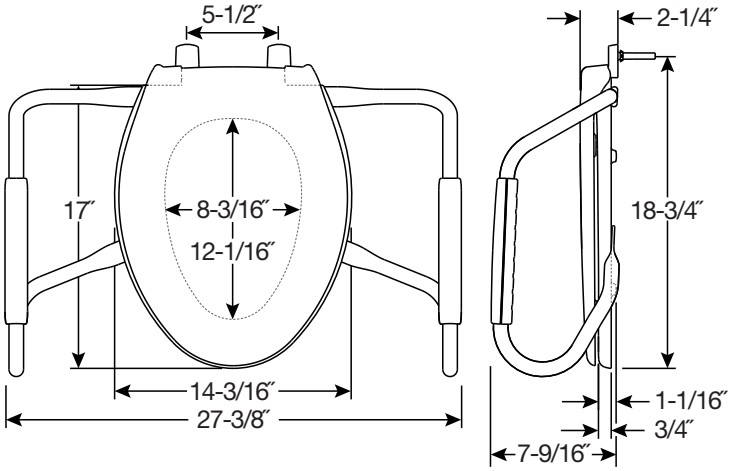

FEATURES:

- **STA-TITE® Commercial Fastening System™**
  Eliminates callbacks for loosened seats
- **DuraGuard® Antimicrobial ***
  Built-In Seat Protection™
- **Medic-Aid® Side Arms**
  ADA tested stainless steel safety side arms with contoured plastic grips

** DuraGuard Antimicrobial does not protect users against bacteria, viruses, or other disease organisms. Always clean and wash this product thoroughly before and after each use.*

SPECIFICATIONS:

Size: Elongated

Material: Plastic

Style: Closed Front with Cover

Ring Bumpers: Four

Hinges: Plastic with Non-Corroding 300 Series Stainless Steel Posts and Pintles

Hardware: STA-TITE® Commercial Fastening System™

Side Arms Weight Capacity: ADA tested to 250 lbs

Codes & Standards: Complies with IAPMO/ANSI Z124.5 Performance Standards Heavy-Duty Commercial

Proudly Made in the USA

Eco-Friendly

Bemis Manufacturing Co., Sheboygan Falls, WI 53085 | ToiletSeats.com | ph: 800.558.7651 | fx: 800.292.3647

Bemis Manufacturing Co. reserves the right to make revisions without notice to product specifications.
©2018 0B7012454

MA2150T

MEDIC-AID® HEAVY-DUTY
PLASTIC TOILET SEAT

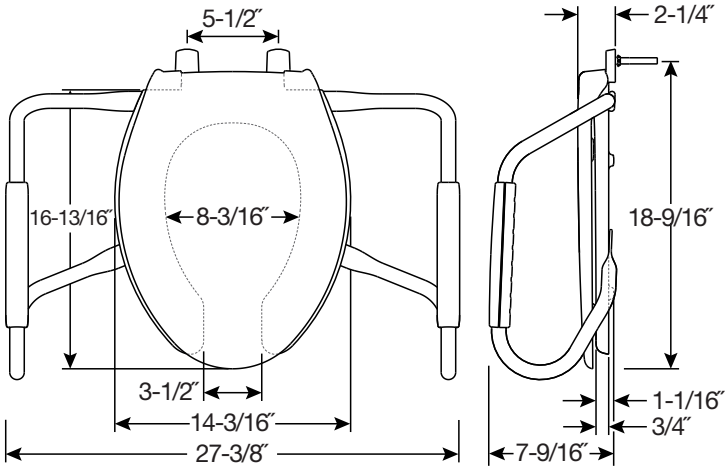

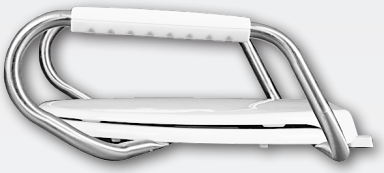

FEATURES:

- **STA-TITE® Commercial Fastening System™**
  Eliminates callbacks for loosened seats
- **DuraGuard® Antimicrobial ***
  Built-In Seat Protection™
- **Medic-Aid® Side Arms**
  ADA tested stainless steel safety side arms with contoured plastic grips

** DuraGuard Antimicrobial does not protect users against bacteria, viruses, or other disease organisms. Always clean and wash this product thoroughly before and after each use.*

SPECIFICATIONS:

Size: Elongated

Material: Plastic

Style: Open Front with Cover

Ring Bumpers: Four

Hinges: Plastic with Non-Corroding 300 Series Stainless Steel Posts and Pintles

Hardware: STA-TITE® Commercial Fastening System™

Side Arms Weight Capacity: ADA tested to 250 lbs

Codes & Standards: Complies with IAPMO/ANSI Z124.5 Performance Standards Heavy-Duty Commercial

Proudly Made in the USA

Eco-Friendly

Bemis Manufacturing Co., Sheboygan Falls, WI 53085 | ToiletSeats.com | ph: 800.558.7651 | fx: 800.292.3647

Bemis Manufacturing Co. reserves the right to make revisions without notice to product specifications.
©2018 0B7012453

MA2050T

MEDIC-AID® HEAVY-DUTY
PLASTIC TOILET SEAT

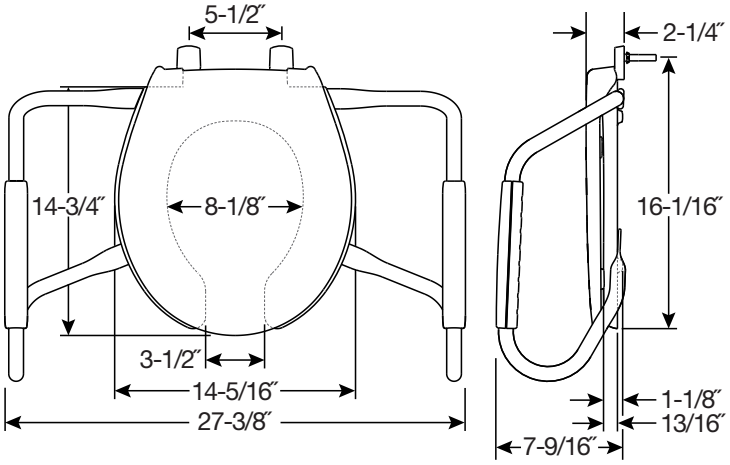

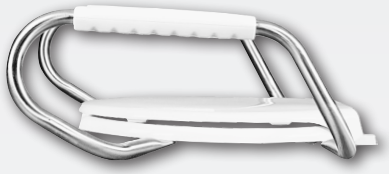

FEATURES:

- **STA-TITE® Commercial Fastening System™**
  Eliminates callbacks for loosened seats
- **DuraGuard® Antimicrobial ***
  Built-In Seat Protection™
- **Medic-Aid® Side Arms**
  ADA tested stainless steel safety side arms with contoured plastic grips

** DuraGuard Antimicrobial does not protect users against bacteria, viruses, or other disease organisms. Always clean and wash this product thoroughly before and after each use.*

SPECIFICATIONS:

Size: Round

Material: Plastic

Style: Open Front with Cover

Ring Bumpers: Four

Hinges: Plastic with Non-Corroding 300 Series Stainless Steel Posts and Pintles

Hardware: STA-TITE® Commercial Fastening System™

Side Arms Weight Capacity: ADA tested to 250 lbs

Codes & Standards: Complies with IAPMO/ANSI Z124.5 Performance Standards Heavy-Duty Commercial

Proudly Made in the USA

Eco-Friendly

Bemis Manufacturing Co., Sheboygan Falls, WI 53085 | ToiletSeats.com | ph: 800.558.7651 | fx: 800.292.3647

Bemis Manufacturing Co. reserves the right to make revisions without notice to product specifications.
©2018 0B7012453

MA2155T

MEDIC-AID® HEAVY-DUTY
PLASTIC TOILET SEAT

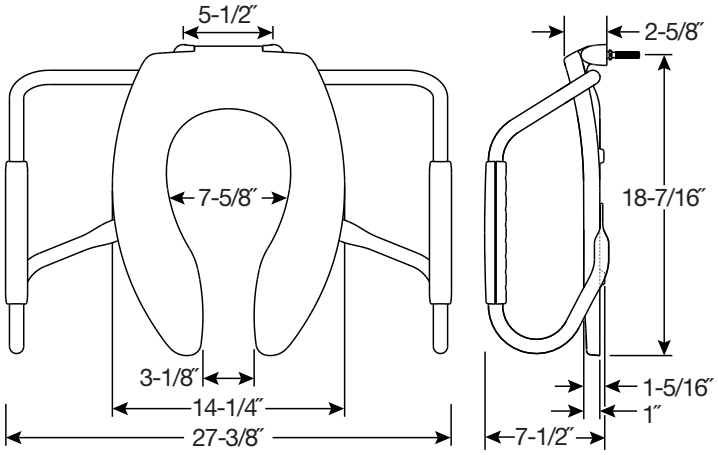

FEATURES:

- **STA-TITE® Commercial Fastening System™**
  Eliminates callbacks for loosened seats
- **DuraGuard® Antimicrobial ***
  Built-In Seat Protection™
- **Medic-Aid® Side Arms**
  ADA tested stainless steel safety side arms with contoured plastic grips

** DuraGuard Antimicrobial does not protect users against bacteria, viruses, or other disease organisms. Always clean and wash this product thoroughly before and after each use.*

SPECIFICATIONS:

Size: Elongated

Material: Plastic

Style: Open Front less Cover

Ring Bumpers: Four

Hinges: Plastic with Non-Corroding 300 Series Stainless Steel Posts and Pintles

Hardware: STA-TITE® Commercial Fastening System™

Side Arms Weight Capacity: ADA tested to 250 lbs

Codes & Standards: Complies with IAPMO/ANSI Z124.5 Performance Standards Heavy-Duty Commercial

Proudly Made in the USA

Eco-Friendly

Bemis Manufacturing Co., Sheboygan Falls, WI 53085 | ToiletSeats.com | ph: 800.558.7651 | fx: 800.292.3647

Bemis Manufacturing Co. reserves the right to make revisions without notice to product specifications.
©2018 0B7012452

BEMIS®

REFERENCE

CLASSIC COLORS™

CROSS-REFERENCE

COLOR NUMBER	TOILET MANUFACTURER	COLOR NAME
346	American Standard	Linen
	Briggs	Biscuit
	Eljer	Biscuit / Linen
	Gerber	British Biscuit
	Gerberit	Biscuit
	Kohler	Biscuit
	Mansfield	Antique Lace
	Toto	Sedona Beige
006	American Standard	Bone
	Artesian	Bone
	Briggs	Bone
	Crane	Bone / Cameo
	Gerber	Bone
	Gerberit	Bone
	Kilgore	Bone
	Mansfield	Classic Bone
	Norris	Ivory
	Peerless	Bone
	Universal Rundle	Mushroom
036	Crane	Cameo-old
	Eljer	Natural
	Gerber	Wheat
146	Crane	Almond Nut
	Gerber	Almond
	Kilgore	Almond
	Kohler	Almond
	Mansfield	Natural / Almond
	Universal Rundle	Doeskin
	Western Pottery	Bone
376	American Standard	Warm White
076	Universal Rundle	Cream
046	Artesian	Peach Sand
	Briggs	Parchment
	Gerber	Nutria
	Kilgore	Parchment
	Kohler	Parchment
	Mansfield	Royal Parchment
	Norris	Papyrus
	Peerless	Parchment
788	Kohler	Sandbar
311	American Standard	Blonde
341	Kohler	Jersey Cream / Cream Satin
288	American Standard	Candlelyght
098	Kohler	Chamois
048	American Standard	Persian Brown
	Kohler	Suez Tan

Bemis Manufacturing Co. reserves the right to make revisions without notice to product specifications.
©2018 0B7012457

CLASSIC COLORS™

CROSS-REFERENCE

COLOR NUMBER	TOILET MANUFACTURER	COLOR NAME
068	American Standard	Fawn Beige
	Briggs	Fawn Beige
	Crane	Autumn Beige
	Gerber	Jamaican Beige
	Kilgore	Fawn Beige
	Mansfield	Classic Beige
	Peerless	Fawn Beige
088	Crane	Sun Tan
	Eljer	Tuscan Tan
	Gerber	Ocean Sand
	Richmond-Rheem	Tropic Tan
	Universal Rundle	Desert Tan
148	Briggs	Tampa Sand
	Crane	Sahara Sand
	Eljer	Sandalwood / Sandlewood
	Gerber	Tijuana Sand
	Kilgore	Mexican Sand
	Kohler	Mexican Sand
	Mansfield	Desert Sand
	Norris	Moroccan Sand
	Peerless	Mexican Sand
541	Kohler	Sunlight
221	Eljer	Creamy Yellow (sub. for Colonial White)
141	Artesian	Soft Yellow
	Briggs	Special Vanilla
	Kohler	French Vanilla
	Mansfield	French Chiffon
	Norris	Parisian Crème
	Universal Rundle	Spring Yellow
071	Artesian	Golden Harvest
	Eljer	Desert Gold
	Gerber	Sahara Gold
031	American Standard	Autumn Gold
	Briggs	Harvest Gold
	Crane	Aztec Gold
	Gerber	Spanish Gold
	Kilgore	Gold
	Kohler	Harvest Gold
	Mansfield	Royal Gold
	Norris	Harvest Gold
	Peerless	Harvest Gold
	Universal Rundle	Gold
211	American Standard	Saffron Yellow (sub. for Manchu Yellow)
	Artesian	Citron Yellow
	Briggs	Saffron / Manchu
	Crane	Buttercup Yellow (sub. for Citrus Yellow)

Bemis Manufacturing Co. reserves the right to make revisions without notice to product specifications.
©2018 0B7012457

CLASSIC COLORS™

CROSS-REFERENCE

COLOR NUMBER	TOILET MANUFACTURER	COLOR NAME
211 (continued)	Gerber	Citron Yellow (sub. for Yellow)
	Kohler	Sunrise
	Peerless	Saffron Yellow
	Universal Rundle	Yellow
115	Eljer	Avocado
	Universal Rundle	Avocado
125	Artesian	Avocado
	Briggs	Avocado
	Crane	Avocado
	Gerber	Avocado
	Kilgore	Avocado
	Kohler	Avocado
255	Kohler	Fresh Green
305	American Standard	Honeydew
	Eljer	Sea Mist Green
495	Eljer	Sage
165	American Standard	Ming Green
025	Crane	Pale Jade
	Eljer	Pastel Green
035	Artesian	Azure Green
	Briggs	Sea Green
095	American Standard	Bayberry-Avocado
	Briggs	Bayberry
	Peerless	Bayberry
	Universal Rundle	Green
355	Kohler	Aspen Green
	Norris	Alpine Green
375	American Standard	Rain Forest (sub. for Tourmaline)
145	Kohler	Timberline
645	American Standard	Spring
205	American Standard	Aegean Mist
455	Artesian	Willow Green
	Briggs	Spring Mist
	Crane	Seafoam
	Kohler	Seafoam Green
	Universal Rundle	Green Ice
105	American Standard	Surf Green
465	American Standard	Classic Turquoise
055	Kohler	Spruce Green
335	Eljer	Island Sea
325	Eljer	Verde Green
655	Kohler	Teal
	Universal Rundle	Green Velvet
565	American Standard	Light Turquoise

Bemis Manufacturing Co. reserves the right to make revisions without notice to product specifications.
©2018 0B7012457

CLASSIC COLORS™

CROSS-REFERENCE

COLOR NUMBER	TOILET MANUFACTURER	COLOR NAME
074	Universal Rundle	Blue
464	American Standard	Dresden Blue
	Briggs	Dresden Blue
	Crane	Powder Blue
	Gerber	Dawn Blue
	Kilgore	Dresden Blue
	Mansfield	Heritage Blue
	Peerless	Dresden Blue
024	Crane	Sky Blue
	Eljer	Twilight Blue
044	Briggs	Bermuda Blue
	Gerber	Wedgewood Blue
	Kilgore	Cerulean Blue
	Kohler	Cerulean Blue
	Mansfield	Cascade Blue
	Norris	Caribbean Blue
	Peerless	Cerulean Blue
034	Artesian	Lucerne Blue
	Briggs	Sky Blue
064	American Standard	Regency Blue (sub. for Clair de Lune)
	Briggs	Regency Blue
	Gerber	Regal Blue
	Peerless	Regency Blue
144	Briggs	Tampa Blue
	Kohler	New Orleans Blue
324	Eljer	Oxford Blue
174	Universal Rundle	Blue Mist
344	Briggs	Soft Blue
	Gerber	Powder Blue
	Kilgore	Heron Blue
	Kohler	Heron Blue
	Mansfield	Misty Blue
424	American Standard	Daydream
304	Eljer	Glacier Blue
114	Eljer	Denim Blue
364	American Standard	Colonial Blue
374	American Standard	Rhapsody Blue
244	Kohler	Navy
052	Artesian	Pearl Gray
	Briggs	Light Grey
	Crane	Tender Grey
	Gerber	Soft Grey
	Kilgore	Tender Grey
	Kohler	Tender Grey
	Mansfield	Harbor Gray

Bemis Manufacturing Co. reserves the right to make revisions without notice to product specifications.
©2018 0B7012457

CLASSIC COLORS™

CROSS-REFERENCE

COLOR NUMBER	TOILET MANUFACTURER	COLOR NAME
062	Kohler	Ice Grey
	Sterling	Ice Grey
	Western Pottery	Silver
162	American Standard	Silver
	Briggs	Royal Silver
	Crane	Platinum Grey
	Eljer	Platinum
	Gerber	Silverado
	Kilgore	Sterling Silver
	Mansfield	Classic Silver
	Norris	Sterling Silver
	Peerless	Sterling Silver
	Universal Rundle	Silver Gray
032	Kohler	Country Grey
042	Kohler	Thunder Grey
302	Eljer	Classic Gray
047	American Standard	Black / Ionian Black
	Briggs	Elegant Black / Black
	Crane	Black
	Eljer	Onyx
	Kohler	Black Black / Black / Black Brilliance
	Mansfield	Black
	Toto	Ebony
	Universal Rundle	Black
078	Artesian	Tawny Beige
	Briggs	Sandstone
	Universal Rundle	Tan
443	Artesian	Blush
	Briggs	Blush
	Crane	Blush
	Eljer	Zinfandel
	Gerber	Blush
	Kohler	Innocent Blush
	Mansfield	Dawn Blush
	Sterling	Innocent Blush
368	American Standard	Light Mink
468	American Standard	Classic Mink
018	American Standard	Spice Mocha
348	Kohler	Swiss Chocolate
168	American Standard	Americana Brown
	Artesian	Java
	Briggs	Café Brown
	Crane	Teakwood
	Peerless	Americana Brown
248	Gerber	Mocha
	Kohler	Expresso
	Norris	Chocolate

Bemis Manufacturing Co. reserves the right to make revisions without notice to product specifications.
©2018 0B7012457

CLASSIC COLORS™

CROSS-REFERENCE

COLOR NUMBER	TOILET MANUFACTURER	COLOR NAME
363	American Standard	Shell
	Briggs	Shell
	Crane	Carnation Pink
	Gerber	Seashell
	Mansfield	Caribbean Shell
	Sterling	Shell
	Universal Rundle	Rose Dawn
643	Artesian	Peach Blossom
	Kohler	Desert Bloom
	Western Pottery	Peach
213	Eljer	Peach Bisque
	Gerber	Peach
283	American Standard	Peach Blossom
	Crane	Peach Blossom
163	American Standard	Bermuda Coral
043	American Standard	Coralin
	Briggs	Coral
	Gerber	Petal Pink
	Kilgore	Apricot
	Kohler	Peachblow
243	Artesian	Cameo Rose
	Crane	Wild Rose
	Gerber	English Rose
	Kohler	Wild Rose
	Norris	Rose
	Western Pottery	Rose
463	American Standard	Heather
063	American Standard	Venetian Pink
	Artesian	Bahama Pink
	Briggs	Venetian Pink
	Eljer	Blossom Pink
	Peerless	Venetian Pink
023	Artesian	Carnation Pink
	Crane	Shell Pink
	Eljer	Misty Rose
	Universal Rundle	Pink
143	Kohler	Pink Champagne
	Norris	Chablis Pink
303	Eljer	Dusty Rose
343	Briggs	Desert Rose
	Kohler	Raspberry Puree
	Mansfield	Raspberry
	Universal Rundle	Cranberry
313	American Standard	Tang Red
	Eljer	Ruby
373	American Standard	Loganberry

Bemis Manufacturing Co. reserves the right to make revisions without notice to product specifications.
©2018 0B7012457

CLASSIC COLORS™

CROSS-REFERENCE

COLOR NUMBER	TOILET MANUFACTURER	COLOR NAME
444	Kohler	Skylight / Horizon Blue
	Universal Rundle	Chicory Blue
319	Eljer	Lilac
563	American Standard	Orchid
019	American Standard	Orchid of Vincennes
	Briggs	Lilac
	Kohler	Lavender
	Richmond-Rheem	Misty Lilac
208	Kohler	Merlot
153		Red
390	Toto	Cotton White
020	Crane	White
160	American Standard	Euro White

Bemis Manufacturing Co., Sheboygan Falls, WI 53085 | ToiletSeats.com | ph: 800.558.7651 | fx: 800.292.3647
Bemis Manufacturing Co. reserves the right to make revisions without notice to product specifications.
©2018 0B7012457

CLASSIC COLORS™

CROSS-REFERENCE

AMERICAN STANDARD

Aegean Mist 205
Americana Brown 168
Autumn Gold 031
Bayberry 095
Bermuda Coral 163
Black/Ionian Black 047
Blonde 311
Bone 006
Candlelyght 288
Classic Mink 468
Classic Turquoise 465
Colonial Blue 364
Coralin 043
Daydream 424
Dresden Blue 464
Euro White 160
Fawn Beige 068
Heather 463
Honeydew 305
Light Mink 368
Light Turquoise 565
Linen 346
Loganberry 373
Ming Green 165
Orchid 563
Orchid of Vincennes 019
Peach Blossom 283
Persian Brown 048
Rain Forest 375
Regency Blue 064
Rhapsody Blue 374
Saffron Yellow 211
Shell 363
Silver 162
Spice Mocha 018
Spring 645
Surf Green 105
Tang Red 313
Venetian Pink 063
Warm White 376

ARTESIAN

Avocado 125
Azure Green 035
Bahama Pink 063
Blush 443
Bone 006
Cameo Rose 243
Carnation Pink 023
Citron Yellow 211
Golden Harvest 071
Java 168
Lucerne Blue 034
Peach Sand 046
Peach Blossom 643
Pearl Gray 052
Soft Yellow 141
Tawny Beige 078
Willow Green 455

BRIGGS

Avocado 125
Bayberry 095
Bermuda Blue 044
Biscuit 346
Blush 443
Bone 006
Café Brown 168
Coral 043
Desert Rose 343
Dresden Blue 464
Elegant Black/Black 047
Fawn Beige 068
Harvest Gold 031
Light Grey 052
Lilac 019
Parchment 046
Regency Blue 064
Royal Silver 162
Saffron Yellow 211
Sandstone 078
Sea Green 035
Shell 363
Sky Blue 034
Soft Blue 344
Special Vanilla 141
Spring Mist 455
Tampa Blue 144
Tampa Sand 148
Venetian Pink 063

CRANE

Almond Nut 146
Autumn Beige 068
Avocado 125
Aztec Gold 031
Black 047
Blush 443
Bone/Cameo 006
Buttercup Yellow 211
Cameo-old 036
Carnation Pink 363
Crane White 020
Pale Jade 025
Peach Blossom 283
Platinum Grey 162
Powder Blue 464
Sahara Sand 148
Seafoam 455
Shell Pink 023
Sky Blue 024
Sun Tan 088
Teakwood 168
Tender Grey 052
Wild Rose 243

ELJER

Avocado 115
Biscuit/Linen 346
Blossom Pink 063
Classic Gray 302
Creamy Yellow 221
Denim Blue 114
Desert Gold 071
Dusty Rose 303
Glacier Blue 304
Island Sea 335
Lilac 319
Misty Rose 023
Natural 036
Onyx 047
Oxford Blue 324
Pastel Green 025
Peach Bisque 213
Platinum 162
Ruby 313
Sage 495
Sandalwood/Sandlewood 148
Sea Mist Green 305
Tuscan Tan 088
Twilight Blue 024
Verde Green 325
Zinfandel 443

GERBER

Almond 146
Avocado 125
Blush 443
Bone 006
British Biscuit 346
Citron Yellow 211
Dawn Blue 464
English Rose 243
Jamaican Beige 068
Mocha 248
Nutria 046
Ocean Sand 088
Peach 213
Petal Pink 043
Powder Blue 344
Regal Blue 064
Sahara Gold 071
Seashell 363
Silverado 162
Soft Grey 052
Spanish Gold 031
Tijuana Sand 148
Wedgewood Blue 044
Wheat 036

KILGORE

Almond 146
Apricot 043
Avocado 125
Bone 006
Cerulean Blue 044
Dresden Blue 464
Fawn Beige 068
Gold 031
Heron Blue 344
Parchment 046
Mexican Sand 148
Sterling Silver 162
Tender Grey 052

KOHLER

Almond 146
Aspen Green 355
Avocado 125
Biscuit 346
Black Black/Black/
Black Brilliance 047
Cerulean Blue 044
Chamois 098
Country Grey 032
Desert Bloom 643
Expresso 248
French Vanilla 141
Fresh Green 255
Harvest Gold 031
Heron Blue 344
Ice Grey 062
Innocent Blush 443
Jersey Cream/Cream Satin 341
Lavender 019
Merlot 208
Mexican Sand 148
Navy 244
New Orleans Blue 144
Parchment 046
Peachblow 043
Pink Champagne 143
Raspberry Puree 343
Sandbar 788
Seafoam Green 455
Skylight/Horizon Blue 444
Spruce Green 055
Suez Tan 048
Sunlight 541
Sunrise 211
Swiss Chocolate 348
Teal 655
Tender Grey 052
Thunder Grey 042
Timberline 145
Wild Rose 243

MANSFIELD

Antique Lace 346
Black 047
Caribbean Shell 363
Cascade Blue 044
Classic Beige 068
Classic Bone 006
Classic Silver 162
Dawn Blush 443
Desert Sand 148
French Chiffon 141
Harbor Gray 052
Heritage Blue 464
Misty Blue 344
Natural/Almond 146
Raspberry 343
Royal Gold 031
Royal Parchment 046

NORRIS

Alpine Green 355
Caribbean Blue 044
Chablis Pink 143
Chocolate 248
Harvest Gold 031
Ivory 006
Moroccan Sand 148
Papyrus 046
Parisian Crème 141
Rose 243
Sterling Silver 162

PEERLESS

Americana Brown 168
Bayberry 095
Bone 006
Cerulean Blue 044
Dresden Blue 464
Fawn Beige 068
Harvest Gold 031
Mexican Sand 148
Parchment 046
Regency Blue 064
Saffron Yellow 211
Sterling Silver 162
Venetian Pink 063

STERLING

Ice Grey 062
Innocent Blush 443
Shell 363

TOTO

Cotton White 390
Sedona Beige 346
Ebony 047

UNIVERSAL RUNDLE

Avocado 115
Black 047
Blue Mist 174
Blue 074
Chicory Blue 444
Cranberry 343
Cream 076
Desert Tan 088
Doeskin 146
Gold 031
Green Ice 455
Green Velvet 655
Green 095
Mushroom 006
Pink 023
Rose Dawn 363
Silver Gray 162
Spring Yellow 141
Tan 078
Yellow 211

WESTERN POTTERY

Bone 146
Peach 643
Rose 243
Silver 062

Bemis Manufacturing Co., Sheboygan Falls, WI 53085 | ToiletSeats.com | ph: 800.558.7651 | fx: 800.292.3647
Bemis Manufacturing Co. reserves the right to make revisions without notice to product specifications.
©2018 0B7012457